This is a digital copy of a book that was preserved for generations on library shelves before it was carefully scanned by Google as part of a project to make the world's books discoverable online.

It has survived long enough for the copyright to expire and the book to enter the public domain. A public domain book is one that was never subject to copyright or whose legal copyright term has expired. Whether a book is in the public domain may vary country to country. Public domain books are our gateways to the past, representing a wealth of history, culture and knowledge that's often difficult to discover.

Marks, notations and other marginalia present in the original volume will appear in this file - a reminder of this book's long journey from the publisher to a library and finally to you.

Usage guidelines

Google is proud to partner with libraries to digitize public domain materials and make them widely accessible. Public domain books belong to the public and we are merely their custodians. Nevertheless, this work is expensive, so in order to keep providing this resource, we have taken steps to prevent abuse by commercial parties, including placing technical restrictions on automated querying.

We also ask that you:

+ *Make non-commercial use of the files* We designed Google Book Search for use by individuals, and we request that you use these files for personal, non-commercial purposes.

+ *Refrain from automated querying* Do not send automated queries of any sort to Google's system: If you are conducting research on machine translation, optical character recognition or other areas where access to a large amount of text is helpful, please contact us. We encourage the use of public domain materials for these purposes and may be able to help.

+ *Maintain attribution* The Google "watermark" you see on each file is essential for informing people about this project and helping them find additional materials through Google Book Search. Please do not remove it.

+ *Keep it legal* Whatever your use, remember that you are responsible for ensuring that what you are doing is legal. Do not assume that just because we believe a book is in the public domain for users in the United States, that the work is also in the public domain for users in other countries. Whether a book is still in copyright varies from country to country, and we can't offer guidance on whether any specific use of any specific book is allowed. Please do not assume that a book's appearance in Google Book Search means it can be used in any manner anywhere in the world. Copyright infringement liability can be quite severe.

About Google Book Search

Google's mission is to organize the world's information and to make it universally accessible and useful. Google Book Search helps readers discover the world's books while helping authors and publishers reach new audiences. You can search through the full text of this book on the web at http://books.google.com/

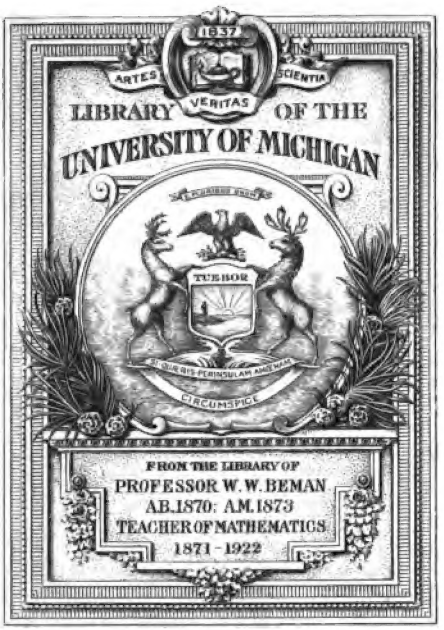
1837
ARTES
VERITAS
SCIENTIA
LIBRARY OF THE
UNIVERSITY OF MICHIGAN
TUEBOR
CIRCUMSPICE
FROM THE LIBRARY OF
PROFESSOR W. W. BEMAN
A.B. 1870: A.M. 1873
TEACHER OF MATHEMATICS
1871 - 1922

QA
35
.S25
177
NON
CIRCULATIN

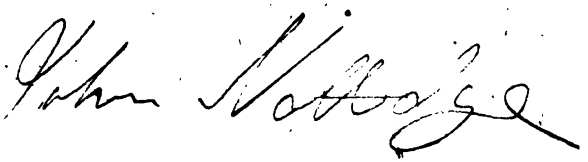

SELECT PARTS

OF

SAUNDERSON'S

ELEMENTS

OF

ALGEBRA.

FOR THE USE OF

STUDENTS AT THE UNIVERSITIES.

THE FOURTH EDITION;

REVISED AND CORRECTED.

LONDON:

Printed for W. BOWYER and J. NICHOLS,
J. F. and C. RIVINGTON, L. DAVIS,
S. BLADON, N. CONANT,
and J. WOODYER.

MDCCLXXVI.

Gift
From the Library
Prof. W. W. Beman
1-28-30

ADVERTISEMENT.

THE Excellence of Profeſſor SAUNDERSON'S *Elements of Algebra* is univerſally acknowledged: But as that WORK contains many CURIOUS and ELEGANT PIECES, which are rather of Advantage and Amuſement to Proficients in the general Science of the Mathematics, than of neceſſary Uſe to Students in Algebra; ſome of the principal Tutors in the Univerſity of *Cambridge* were deſirous of having ſuch Parts ſelected from the Whole, as would give their Pupils a clear and comprehenſive Knowledge of Algebra, without putting them promiſcuouſly to the Expence of purchaſing the original Work, which was publiſhed in Two Volumes, Quarto. The Public is indebted to a Gentleman in

that Univerſity, of diſtinguiſhed Judgment and Skill in the Mathematics, for ſelecting the ſeveral Parts which make up the following Work: Nor have any Endeavours been wanting, to have it printed as correctly as poſſible.

POSTULATA.

BEFORE I enter upon my province, it may not be amiſs to acquaint my young diſciple what preparations he is to make, and what qualifications I expect of him beforehand, that we may neither of us find ourſelves diſappointed afterwards. I expect then that he knows how to add, to ſubtract, to multiply, to divide, to find a fourth proportional, and to extract roots, eſpecially the ſquare root: nay I expect further, that he ſhall not only be able to perform all theſe operations exactly and readily, but alſo that he ſhall be able to apply them upon all common occaſions; in a word, I expect that he be tolerably well ſkilled in common Arithmetick, at leaſt ſo far as relates to whole numbers: for this reaſon it is that I have prefixed a few arithmetical queſtions, wherein he may firſt try his ſtrength and ſkill before he ventures any further; they are for the moſt part very eaſy. I cannot ſay indeed they are the beſt choſen, but they were ſuch as lay in my way when I firſt began this work and was haſtening to matters of greater moment; and I do not ſee but they may, if ſtudied with care and attention, anſwer well enough the end they were intended for. If he finds no difficulty in theſe, he will have little reaſon to doubt of his ſucceſs afterwards; but if he does, he ought then at laſt to become ſenſible of his own defects, and to endeavour to ſupply whatever is wanting, and to correct whatever is amiſs, before he enters himſelf under my conduct; in the mean time he has my leave to

hope that I ſhall be leſs upon the reſerve with him, when he falls more immediately under my care.

N. B. The *praxis* of the rule of proportion, and of the rule for extracting the ſquare root, not being (properly ſpeaking) of the nature of ſimple *poſtulata*, but rather deducible from the four firſt; I ſhall not fail to demonſtrate theſe rules ſo ſoon as I ſhall find proper opportunities for that purpoſe.

Queſtions for exerciſe in Multiplication.

Multiplication is taking any one number called the multiplicand as often as is expreſſed by any other number called the multiplicator, and the number produced by this operation is called the product: whence it follows, that the product contains the multiplicand as often as there are units in the multiplicator, and that if a number of a greater denomination is to be reduced to an equivalent number of a leſs, it muſt be done by multiplication. As for example; In a pound ſterling there are 20 ſhillings; therefore in every ſum of money conſiſting of even pounds, there are twenty times as many ſhillings as there are pounds; therefore, if any number of pounds be multiplied by 20, the product will be an equivalent number of ſhillings; and the ſame muſt be obſerved in all other caſes.

QUEST. I.

It is required to reduce 456 *pounds* 13 *ſhillings and* 4 *pence, into ſhillings, pence, and farthings.*

Anſwer. Shillings 9133
Pence 109600
Farthings 438400.

QUEST.

QUEST. 2.

A certain island contains 36 counties, every county 37 parishes, every parish 38 families, and every family 39 persons: I demand the number of parishes, families, and persons in the whole island.

Answer.		
	Parishes	1332
	Families	50616
	Persons	1974024

QUEST. 3.

In 1730 years, 42 weeks, and 3 days, how many minutes?

N. B. A year consists of 365 days, 6 hours, and an hour of 60 minutes.

Hours in one year	8766
In 1730 years	15165180
In 42 weeks 3 days	7128
In the whole	15172308
Minutes in the whole	910338480.

QUEST. 4.

There is a certain field 102004 feet long, and 102003 feet broad: I demand the number of square feet therein contained?

Answer. 10404714012.

QUEST. 5.

There is a certain floor 14 feet 4 inches broad, and 96 feet 6 inches long: I demand how many square inches are therein contained?

Answer. 338136 square inches.

QUEST. 6.

A certain piece of wood 1 *foot* 2 *inches thick,* 3 *feet* 4 *inches broad, and* 5 *feet* 6 *inches long, is to be cut into ſmall cubes like dies, each of which is to be a quarter of an inch every way: I demand into how many dies the whole may be reſolved.*

Anſwer. The whole may be reſolved into 2365440 dies.

QUEST. 7.

I demand the number of changes that may be rung on 12 *bells.*

Changes upon	2	bells	2
on	3	bells	6
on	4	bells	24
on	5	bells	120
on	6	bells	720
on	7	bells	5040
on	8	bells	40320
on	9	bells	362880
on	10	bells	3628800
on	11	bells	39916800
on	12	bells	479001600

QUEST. 8.

How many different ways can four common dies come up at one throw?

Anſwer. 1296 ways.

QUEST. 9.

Suppoſe one undertake to throw an ace at one throw with four common dies; what probability is there of his effecting it?

Anſwer. By the laſt queſtion four dies can come up 1296 different ways with and without the ace; and

and by a like computation, they can come up 625 ways without the ace; therefore there are 671 ways wherein one or more of them may turn up an ace; therefore the undertaker has the better of the lay in the proportion of 671 to 625.

QUEST. 10.

There are two incloſures of the ſame circumference, that is, both incloſed with the ſame number of pales; but one is a ſquare whoſe ſide is 125 *feet, and the other an oblong or long ſquare:* 124 *feet in breadth, and* 126 *in length:* quære *which is the greater cloſe, that is, which,* cæteris paribus, *will bear moſt graſs?*

Anſwer. The ſquare: for that contains 15625 ſquare feet; whereas the other contains but 15624.

Queſtions for exerciſe in Diviſion.

The deſign of diviſion is, to ſhew how often one number called the diviſor is contained in another called the dividend, and the number that ſhews this is called the quotient; whence, and from the definition of multiplication already given, I obſerve, 1*ſt*, That the diviſor multiplied by the quotient, and conſequently the quotient multiplied by the diviſor, will always be equal to the dividend, provided there be no remainder after the diviſion is over; but if there be, then this remainder added to, or taken into the product, will give the dividend, which is the beſt proof of diviſion. 2*dly*, That as the diviſor is ſuch a part of the dividend as is expreſſed by the quotient; ſo alſo is the quotient ſuch a part as is expreſſed by the diviſor. Thus 12 divided by 3 quotes 4; therefore 3 is a fourth part, and 4 a third part, of 12. 3*dly*, Hence may a number be found that ſhall be diviſible by any two given numbers whatever without remainders, to wit, by multiplying the two given num-

bers together. Thus if I would have a number that can be divided by both 6 and 9 without any remainders, I multiply 9 by 6, and the product 54 will anſwer both conditions; though 18 be the leaſt number of that kind. *4thly*, Multiplication and diviſion by the ſame number are the reverſe of each other, and ſo muſt neceſſarily have contrary effects: for whereas multiplication increaſes a number by taking it as often as is expreſſed by the multiplicator, diviſion (on the contrary) leſſens it, by taking only ſuch a part of it as is expreſſed by the diviſor. *5thly*, Hence if a number of a leſſer denomination be to be changed into an equivalent number of a greater, as farthings into pence, pence into ſhillings, *&c.* it muſt be done by diviſion, as the reverſe is done by multiplication. *6thly*, Whenever it is propoſed to know how often one quantity of any kind is contained in another of the ſame kind, the numbers repreſenting theſe quantities muſt be reduced to the ſame denomination before any diviſion can take place. Thus if I would know how many thirteenpencehalfpennies there are in twenty ſhillings, I muſt not only reduce the thirteenpencehalfpenny to 27 halfpence, but alſo the 20 ſhillings into 480 halfpence; and then muſt enquire by diviſion how often 27 halfpence are contained in 480 halfpence, that is, how often 27 is contained in 480; the quotient is 17, and the remainder 21, that is 21 halfpence, for in all diviſion, the remainder muſt be of the ſame denomination with the dividend whereof it is a part; therefore in 20 ſhillings there are 17 thirteenpencehalfpennies, and 10 pence halfpenny over.

QUEST. II.

It is required to reduce 987654321 *farthings into pounds, ſhillings, and pence.*

Anſwer. 987654321 farthings are equivalent to 246913580 pence and 1 farthing; or to 2057613 ſhillings, 8*d.* 1*q.*; or to 102806 pounds, 13*s.* 8*d.* 1*q.*

QUEST. 12.

One lends me 1296 *guineas when they were valued at* 1*l.* 1*s. and ſixpence a piece: how many muſt I pay him when they are valued at* 1*l.* 1*s. apiece?*

Anſwer. 1326 guineas 18 ſhillings.

QUEST. 13.

A certain floor 24 *feet* 4 *inches broad,* 96 *feet* 6 *inches long, is to be laid at the rate of* 12 *pence the ſquare foot: I demand what the whole charge will amount to.*

Anſwer. The floor contains 338136 ſquare inches, or 2348 ſquare feet and 24 ſquare inches; therefore the whole charge amounts to 117 pounds 8 ſhillings and two pence.

QUEST. 14.

There is a certain cooler 36 *inches deep,* 42 *inches wide, and* 72 *inches long: I demand its ſolid content in Engliſh gallons.*

Note. An Ale gallon is 282 cubic inches.

Anſwer. The veſſel contains 108864 cubic inches, that is, 386 gallons, and 12 cubic inches over.

QUEST. 15.

A cubic foot of water weighs 76 *pounds Troy or Roman weight; and air is* 860 *times lighter than water: I demand the weight of a cubic foot of air.*

N. B. A pound Troy contains 12 ounces, one ounce 20 pennyweights, and one pennyweight 24 grains.

Answer. A cubic foot of air weighs Troy weight 1 *oz.* 1 *pwt.* 5 *gr.*

QUEST. 16.

The mean time of a lunation, that is, from new moon to new moon, is 29 *days* 12 *hours* 44 *minutes and* 3 *seconds; and a Julian year consists of* 365 *days* 6 *hours: I demand then how many lunations are contained in* 19 *Julian years.*

Hours in a Lunation	708
Minutes	42524
Seconds	2551443
Hours in 19 Julian years	166554
Minutes	9993240
Seconds	599594400

Lunations 235; and 1 hour 28′ 15″ over.

QUEST. 17.

In what time may all the changes on 12 *bells be rung, allowing* 3 *seconds to every round?* See Question the 7*th.*

The number of changes on 12 bells	479001600
The time	1437004800 seconds,
or	23950080 minutes,
or	399168 hours,

or 45 years 27 weeks 6 days 18 hours.

QUEST. 18.

A General of an army distributes 15 *pounds* 19 *shillings and* 2 *pence halfpenny among* 4 *captains,* 5 *lieutenants, and* 60 *common soldiers, in the manner following: Every captain is to have* 3 *times as much as a lieutenant, and every lieutenant twice as much as a common soldier: I demand their several shares.*

The

The ſhare of a common ſoldier	3*s.* 4*d.* ¾
of a lieutenant	6*s.* 9*d.* ½
of a captain	1*l.* 0*s.* 4*d.* ½

Queſtions for exerciſe in the Rule of Three.

And firſt in the Rule of Three Direct.

The rule of proportion, or rule of three, or by ſome the golden rule, is that which teacheth, having three numbers given, to find a fourth proportional, that is, to find a fourth number that ſhall have the ſame proportion to ſome one of the numbers given, as is expreſſed by the other two; and therefore, whenever a queſtion is propoſed wherein ſuch a fourth proportional is required, that queſtion is ſaid to belong to the rule of proportion. Now in queſtions of this nature, eſpecially where the numbers given are not merely abſtract numbers, but are applied to particular quantities, three things are uſually required, to wit, preparation, diſpoſition, and operation.

Firſt as to the preparation, it muſt be obſerved, that of the three numbers given in the queſtion, two will always be of the ſame kind, and muſt be reduced to the ſame denomination, iff they be not ſo already; and if the remaining number be of a mixt denomination, that alſo muſt be reduced to ſome ſimple one.

Secondly, in diſpoſing the numbers thus prepared, thoſe two that are of the ſame denomination muſt be made the firſt and third nnmbers in the rule of proportion, and conſequently the remaining number muſt be the ſecond. But here particular care muſt be taken, that of the two numbers that are of the ſame denomination, that be made the third in the rule of proportion, upon which the main ſtreſs of the queſtion lies, or to which the queſtion more immediately relates, or which contains the demand: and

the

the place of this number being once known, the other two muſt take their places as above directed. This ordering of the numbers for the operation is commonly called, ſtating of the queſtion.

Laſtly, having thus ſtated the queſtion, multiply the ſecond and third numbers together; divide the product by the firſt, and the quotient thence ariſing will be the fourth number ſought; which fourth number, as well as the remainder, if there be any, muſt always be underſtood to be of the ſame denomination with the ſecond. As for example.

QUEST. 19.

A piece of plate weighing 3 pounds 4 ounces and 5 pennyweights, Troy weight, is valued at 5 ſhillings and 6 pence an ounce; what is the value of the whole?

Here we have three quantities concerned in the queſtion, *viz.* 3 pounds 4 ounces and 5 pennyweights; one ounce; and 5 ſhillings and 6 pence; whereof the two firſt, which are of the ſame kind, muſt be reduced to the ſame denomination, and the laſt to a ſimple one; thus: for one ounce I write 20 pennyweights; for 3 pounds, 4 ounces and 5 pennyweights, 805 pennyweights; and for 5 ſhillings and 6 pence, 66 pence; and ſo the numbers are ſufficiently prepared. In the next place I enquire which of the two numbers 20 and 805, which are of the ſame denomination, is that upon which the main ſtreſs of the queſtion lies, and I find it to be 805; for the main buſineſs of this queſtion is, to enquire into the value of 805 pennyweights of plate; the reſt being no more than *data* in order to diſcover this: So I make 805 my third number, 20 which is a number of the ſame denomination my firſt, and 66 my ſecond, and ſtate the queſtion thus; *If* 20 *pennyweights of plate be worth* 66 *pence, what will* 805 *pennyweights of plate*

be

be worth? Now to anſwer this queſtion, I multiply 805 by 66, and the product is 53130; this I divide by my firſt number 20, and the quotient is 2656, and there remains 10, that is, 10 pence; therefore, to render my quotient more compleat, I bring the remaining 10 pence into 40 farthings, and ſo divide again by 20, and find the quotient to be 2, that is, 2 farthings, without any remainder; ſo the value ſought is 2656 pence 2 farthings; that is, 11 pounds 1 ſhilling and 4 pence halfpenny.

A demonſtration of this Praxis.

Caſe 1ſt. Now to demonſtrate this manner of operation, I ſhall reſume the foregoing queſtion, but at firſt under a different ſuppoſition, as thus; *If one pennyweight of plate coſt* 66 *pence, what will* 805 *pennyweights coſt?* Here nobody doubts but that upon this ſuppoſition, 805 pennyweights will coſt 805 times 66 pence, or 66 times 805, that is, 53130 pence; therefore in all inſtances of this kind, that is, where the firſt number in the rule of proportion is unity, the fourth number muſt be found by multiplying the ſecond and third numbers together.

Caſe 2d. Let us now put the queſtion as it was at firſt ſtated, to wit, *If* 20 *pennyweights of plate be worth* 66 *pence, what will* 805 *pennyweights be worth?* Now upon this ſuppoſition it is eaſy to ſee, that neither 1 pennyweight, nor conſequently 805 pennyweights, will be worth above a 20th part of what they were in the former caſe; and therefore we muſt not now ſay that 805 pennyweights are worth 53130 pence, but a 20th part of that ſum, *viz.* 2656 pence 2 farthings: and as this way of reaſoning will be the ſame in all other inſtances, it follows now, that *In the rule of proportion, let the numbers given be what they will, the fourth number muſt be had by multiplying the ſecond and third numbers together and dividing the product by the firſt.* Q. E. D.

QUEST,

QUEST. 20.

How far will one be able to travel in 7 days 8 hours, at the rate of 13 miles every 4 hours, allowing 12 hours to a travelling day?

Answer. 299 miles.

QUEST. 21.

What will 1296 yards of walling amount to, at the rate of 4 shillings and 5 pence a rod, a rod being 5 yards and a half?

Answer. 52 pounds 8 pence 3 farthings.

QUEST. 22.

In the mint of England *a pound of gold, that is,* 11 *ounces fine and* 1 *alloy, is at this time coined into* 44 *guineas and an half: I demand how much sterling a pound of pure gold is worth, observing that the alloy is valued at nothing.*

Answer. 50 pounds 19 shillings and 5 pence ½ penny.

QUEST. 23.

What is the annual interest of 987 pounds 6 shillings and 5 pence, at the rate of 6 per cent.?

Answer. 59 pounds 4 shillings and 9 pence ½ penny.

QUEST. 24.

The circumference of the Earth according to the French mensuration is 123249600 French feet: I demand the same in English miles.

N. B.

N. B. A thouſand French feet are equivalent to 1068 Engliſh feet; 3 feet make a yard, and 1760 yards make a mile.

Anſwer. 1316305⅔ Engliſh feet;
or 43876857 yards and 2 feet,
or 24930 miles, 57 yards and 2 feet.

QUEST. 25.

Suppoſing all things as in the foregoing queſtion, I demand how long a ſound will be in paſſing from pole to pole. upon a ſuppoſition that a ſound paſſes over 1142 *feet in a ſecond of time.*

Anſwer. 16 hours and 32 ſeconds.

QUEST. 26.

Monſieur Huygens *found that at* Paris, *the length of a pendulum that ſwung ſeconds, was three feet* 8 *lines and* ½: *I demand its length in Engliſh meaſure.*

Note. A line is $\frac{1}{144}$ part of an inch, and 1000 French half lines are equivalent to 1068 Engliſh half lines, as in the 24th queſtion.

Anſwer. The length in Engliſh meaſure of a pendulum that ſwings ſeconds, is 941 Engliſh half lines; or 39 inches 2 lines and ½.

QUEST. 27.

I demand in how long a time a pipe, that diſcharges 15 *pints in* 2 *minutes* 34 *ſeconds, will fill a ciſtern that is* 36 *inches deep,* 42 *inches wide, and* 72 *inches long.* (ſee queſtion the 14.)

Anſwer. In 31707 ſeconds; or 8 hours 48′ 27″.

For

For as eight pints make a gallon, ſo alſo eight cubic half inches, that is, eight ſmall cubes of half an inch every way make one cubic inch; therefore a pint contains 282 cubic half inches, and fifteen pints 4230; but the whole veſſel contains 108864 cubic inches by queſt. 14; which are equivalent to 870912 cubic half inches; therefore this queſtion ought to be ſtated thus;

If 4230 *cubic half inches be diſcharged in* 154 *ſeconds of time, in what time will* 870912 *cubic half inches be diſcharged?* And the anſwer is,

In 8 hours 48′ 27″ as above.

QUEST. 28.

If a wall 6 *feet thick,* 9 *feet high, and* 432 *feet long, coſt* 720 *pounds in building, what will be the price of a wall of the ſame materials, that is* 12 *feet thick,* 18 *feet high, and* 576 *feet long?*

In the former wall are contained 23328 cubic feet; in the latter 124416; therefore the anſwer to this queſtion is 3840 pounds.

QUEST. 29.

A certain ſteeple projected upon level ground a ſhadow to the diſtance of 57 *yards, when a four-foot ſtaff perpendicularly erected caſt a ſhadow of* 5 *feet* 6 *inches: what was the height of the ſteeple?*

Anſwer. 41 yards 1 foot 4 inches.

QUEST.

QUEST. 30.

Two Perſons A *and* B *make a joint ſtock*; A *puts in* 372 *pounds, and* B 496 *pounds, for the ſame time*; *and they gain* 114 *pounds* 2 *ſhillings: I demand each man's ſhare of the gain.*

Both their ſtocks make 868 pounds; ſay then, if 868 pounds ſtock bring in 114 pounds 2 ſhillings gain, what will 372 pounds, *A's* part of the ſtock, bring in? *Anſwer.* 48 pounds 18 ſhillings for *A's* ſhare of the gain; and this ſubtracted from the whole gain, leaves 65 pounds 4 ſhillings for *B's* ſhare of the gain.

Note. If there be ever ſo many partners, their ſhares of the gain muſt all be found by the rule of proportion, except the laſt, which may be had by ſubtraction; but it would be better to find them all by the rule of proportion, becauſe then, if all the ſhares, when added together, make up the whole gain, it will be an argument that the work is rightly performed.

QUEST. 31.

Two perſons A *and* B *make a joint ſtock*; A *puts in* 496 *pounds for* 2 *months, and* B 620 *pounds for* 3 *months*; *and they gain* 456 *pounds: What will be each man's ſhare of the gain?*

In order to give an anſwer to this queſtion, it muſt be conſidered, that it is the ſame in the caſe of trade, as it is in that of money let out to intereſt, where time is as good as money, that is, whoever lets out 496 pounds for 2 months, is intitled to the ſame ſhare of the whole gain, as if he had let out twice as much, that is 992 pounds, for one month: in like manner, he that lets out 620 pounds for 3 months, has a right to the ſame ſhare of the gain,

as

as if he had let out three times as much, that is, 1860 pounds, for one month: ſubſtitute therefore theſe ſuppoſitions inſtead of thoſe in the queſtion, which may ſafely be done without affecting the concluſion, and then this queſtion will be reduced to the form of the laſt, without any conſideration of the particular quantity of time, thus; *Two merchants* A *and* B *make a joint ſtock*; A *puts in* 992 *pounds, and* B 1860 *pounds for the ſame time; and they gain* 456 *pounds: What will be their reſpective ſhares of the gain?*

Anſwer. A's ſhare will be 158 pounds 12 ſhillings and 2 pence; and *B's*, 297 pounds 7 ſhillings and 10 pence.

QUEST. 32.

If two men in three days will earn 4 *ſhillings, how much will* 5 *men earn in ſix days?*

This and the following queſtion belong to that which they call the double rule of three, wherein 5 numbers are concerned: theſe numbers muſt always be placed as they are in this example, that is, the two laſt numbers muſt always be of the ſame denomination with the two firſt reſpectively, and the number ſought of the ſame denomination with the middle one; then may the queſtion be reduced to the ſingle rule of three two ways, either by expunging the firſt and fourth numbers, or the ſecond and fifth. If you would have the firſt and fourth numbers expunged, you muſt argue thus; two men will earn as much in three days, as one man in two times 3, or 6 days; alſo 5 men will earn as much in 6 days, as one man in thirty days; ſubſtitute therefore this ſuppoſition and this demand, inſtead of thoſe in the queſtion; and it will ſtand thus. If one man in 6 days will earn four ſhillings, how much

much will one man earn in 30 days? Which is as much as to ſay, *If in 6 days a man will earn 4 ſhillings, how much will he earn in 30 days?*

Anſwer. 20 ſhillings.

If you would have the ſecond and fifth numbers expunged, you muſt argue thus: Two men will earn as much in three days, as 3 times two or 6 men in one day; alſo 5 men will earn as much in 6 days, as 30 men in one day; put then the queſtion this way, and it will ſtand thus; If 6 men in one day will earn 4 ſhillings, how much will 30 men earn in one day? That is, *If in any quantity of time 6 men will earn 4 ſhillings, how much will 30 men earn in the ſame time?*

Anſwer. 20 ſhillings, as before.

Whoſoever attends to both theſe methods of extermination, will eaſily fall into a third, which includes both the other, and in practice is much better than either of them; for at the concluſion of both operations, the number ſought was found by multiplying 30 by 4, and dividing the product by 6: Now if he looks back, and traces out theſe numbers, he will find that the number 30 came from the multiplication of the two laſt numbers 5 and 6 together, that 4 was the middle number in the queſtion, and that the diviſor 6 was the product of the two firſt numbers 2 and 3 multiplied together; therefore, *In all queſtions of this nature, if the three laſt numbers be multiplied together, and the product be divided by the product of the two firſt, the quotient will give the number ſought, without any further trouble.*

QUEST. 33.

If for the carriage of three hundred weight 40 miles, I muſt pay 7 ſhillings and 6 pence, what muſt I pay for the carriage of 5 hundred weight 60 miles?

Anſwer. 225 pence, or 18 ſhillings and 9 pence.

Queſtions in the rule of three Inverſe.

Hitherto we have inſtanced in the rule of three direct; but there is alſo another rule of proportion, called the rule of three inverſe; which, as to the preparation and diſpoſition of its numbers, differs nothing from the rule of three direct, but only in the operation; for whereas there, the fourth number was found, by multiplying the ſecond and third numbers together, and dividing by the firſt; here it is found by multiplying the firſt and ſecond numbers together, and dividing by the third. All that remains then, is to be able to diſtinguiſh, when a queſtion belongs to one rule, and when to the other; in order to which, obſerve the following directions: *If more requires more, or leſs requires leſs, work by the rule of three direct; but if more requires leſs, or leſs requires more, work by the rule of three inverſe.* The meaning whereof is, that if, when the third number is greater than the firſt, the fourth muſt be proportionably greater than the ſecond; or if, when the third number is leſs than the firſt, the fourth muſt be proportionably leſs than the ſecond, the queſtion then belongs to the rule of three direct: But if, when the third number is greater than the firſt, the fourth muſt be leſs than the ſecond; or when the third number is leſs than the firſt, the fourth muſt be greater than the ſecond; in either of theſe caſes, the queſtion belongs to the rule of three inverſe, and muſt be reſolved as above directed.

As

As for example,

QUEST. 34.

If 12 *men will eat up a quantity of provision in* 15 *days, how long will* 20 *men be in eating the same?*

This question is of such a nature, that more requires less; for 20 men will consume the same provision in less time than 12; therefore the question belongs to the rule of three inverse; so I multiply the first and second numbers together, and divide by the third, and the quotient 9, that is, 9 days, is an answer to the question.

A demonstration of the rule of three inverse.

If I was to answer this question by pure dint of thought, without any rule to direct me, I should reason thus: whatever quantity of provision lasts 12 men 15 days, the same will last 1 man 12 times as long, that is, 12 times 15, or 180 days; but if it will last 1 man 180 days, it will last 20 men but the 20th part of that time, that is, 9 days: here then the fourth number was found by multiplying the first and second numbers together; and dividing the product by the third; and the reason is the same in all other cases, where-ever the rule of three inverse is concerned. *Q. E. D.*

QUEST. 35.

One lends me 372 *pounds for* 7 *years and* 8 *months, or* 92 *months: how long must I lend him* 496 *pounds for an equivalent?*

Answer. 5 years, 9 months.

QUEST. 36.

If a ſquare pipe, 4 inches and 5 lines wide, will diſcharge a certain quantity of water in one hour's time; in what time will another ſquare pipe, 1 inch and 2 lines wide, diſcharge the ſame quantity from the ſame current?

The orifice of a ſquare pipe 4 inches 5 lines, or 53 lines wide, contains 2809 ſquare lines; and the orifice of a pipe 1 inch 2 lines, or 14 lines wide, contains 196 ſquare lines. Say then, *If an orifice of* 2809 *ſquare lines will diſcharge a certain quantity of water in one hour; in what time will an orifice of* 196 *ſquare lines diſcharge the ſame?*

Anſwer. In 14 hours 19′ 54″.

QUEST. 37.

If 3 men, or 4 women, will do a piece of work in 56 days, how long will one man and one woman be in doing the ſame?

Becauſe of the 3 men, or 4 women, ſome number muſt be found that is diviſible both by 3 and by 4 without remainder; ſuch an one is the number 12, which is the product of 3 and 4 multiplied together; (ſee obſervation the third upon the definition of diviſion :) make then 3 men or 4 women equivalent to 12 boys, and you will have 1 man equivalent to 4 boys, 1 woman to 3 boys, and 1 man and 1 woman to 7 boys, and the queſtion will ſtand thus; *If* 12 *boys will do a piece of work in* 56 *days, how long will* 7 *boys be in doing the ſame?*

Anſwer. 96 days.

QUEST.

QUEST. 38.

If 5 oxen, or 7 colts, will eat up a close in 87 days, in what time will 2 oxen and 3 colts eat up the same?

Answer. In 105 days.

QUEST. 39.

If 2 acres of land will maintain 3 horses 4 days, how long will 5 acres maintain 6 horses?

This question may perhaps, at first sight, be taken to be somewhat of the same nature with the 32d and 33d questions, which belonged to the double rule of three direct; but when it comes to be examined into more narrowly, it will be found to be of a very different nature; for we cannot say here as we did there, that 2 acres will last 3 horses as long as 1 acre will last 6 horses; this would be a very unjust way of thinking, and where-ever it is so, the question ought to be referred to another rule, which they call the double rule of three inverse; the propriety or impropriety of this thought being an infallible criterion whereby to distinguish when a question belongs to one rule, and when to the other. All questions belonging to this rule, as well as those belonging to the other, may be reduced to the single rule of three two ways; either by expunging the first and fourth numbers, or the second and fifth; but then the methods of extermination are different. In questions of this nature, if the first and fourth numbers are to be expunged, the 2 first numbers are to be multiplied by the fourth, and the 2 last by the first; but if the second and fifth numbers are to be expunged, then the two first numbers are to be multiplied by the fifth, and the two last by the second: thus in the question before us, if we

would exterminate the firſt and fourth numbers, we muſt multiply the two firſt numbers, that is, 2 and 3, by the fourth, that is, by 5, and ſay, that 2 acres will laſt three horſes juſt as long as 10 acres will laſt 15 horſes; we muſt alſo multiply the 2 laſt numbers, to wit, 5 and 6, by the firſt, that is, by 2, and ſay, that 5 acres will laſt 6 horſes as long as 10 acres will laſt 12 horſes. Uſe now theſe numbers inſtead of thoſe in the queſtion, and it will be changed into this equivalent one; If 10 acres of land will maintain 15 horſes 4 days, how long will 10 acres maintain 12 horſes? Strike out of the queſtion the firſt and fourth numbers, which, being equal, will be of no uſe in the concluſion, and then the queſtion will ſtand thus; *If 15 horſes will eat up a certain piece of ground in 4 days, how long will 12 horſes be in eating up the ſame?*

Anſwer. 5 days; for this queſtion belongs to the rule of three inverſe.

If we would exterminate the ſecond and fifth numbers out of the queſtion, we muſt multiply the two firſt numbers by the fifth, and ſay, that 2 acres will laſt 3 horſes juſt as long as 12 acres will laſt 18 horſes; we muſt alſo multiply the two laſt numbers by the ſecond, and ſay, that 5 acres will laſt 6 horſes as long as 15 acres will laſt 18 horſes: uſe theſe numbers inſtead of thoſe in the queſtion, and it will be changed into this equivalent one: If 12 acres will maintain 18 horſes 4 days, how long will 15 acres maintain 18 horſes? That is, (ſtriking out the ſecond and fifth numbers) *If 12 acres of land will maintain a certain number of horſes 4 days, how long will 15 acres laſt the ſame number?*

Anſwer. 5 days as before; for this queſtion belongs to the rule of three direct.

In

In both theſe operations, the number ſought was at laſt found by multiplying 15 by 4, and then dividing the product by 12: now whoſoever looks back upon the foregoing reſolution, and obſerves how theſe numbers were formed, he will eaſily perceive, that the number 4 was the middle term in the queſtion; that the number 15 in both operations was the product of the numbers 3 and 5, which lay next the middle term on each ſide; and that the diviſor 12 was in both caſes the product of the extreme numbers 2 and 6: therefore, *In all queſtions belonging to the double rule of three inverſe, where the numbers are ſuppoſed to be ordered as in the double rule of three direct, if the three middle numbers be multiplied together, and the product be divided by the product of the two extremes, the quotient of this diviſion will be the number ſought.* And thus may all the trouble of expunging be avoided, though I thought it proper to explain that method in the firſt place, in order to let the learner into the reaſon of this laſt theorem, which is founded upon it.

Queſtions wherein the extraction of the ſquare root is concerned.

QUEST. 40.

There is a certain field, whoſe breadth is 576 yards, and whoſe length is 1296 yards: I demand the ſide of a ſquare field equal to it.

Anſwer. This field will be equal to a ſquare whoſe ſide is 864 yards.

QUEST. 41.

There is a certain incloſure 3 times as long as it is broad, whoſe area is 46128 ſquare yards: I demand its breadth and length?

The breadth multiplied into the length, that is, the breadth multiplied into 3 times itſelf, is 46128;

therefore the breadth multiplied into itſelf is 15376, therefore the breadth is 124, and the length 372.

QUEST. 42.

A certain ſociety collect among themſelves a ſum amounting to 15 pounds 5 ſhillings and a farthing, every one contributing as many farthings as there were members in the whole ſociety: I demand the number of members.

Anſwer. 121 members.

THE

THE

INTRODUCTION,

Concerning Vulgar and Decimal Fractions.

DEFINITIONS.

Art. 1. A FRACTION, ſimply and abſtractedly conſidered, is that wherein ſome part or parts of an unit are expreſſed: as, if an unit be ſuppoſed to be divided into 4 equal parts, and three of theſe parts are to be expreſſed, it muſt be done by the fraction three fourths, to be written thus $\frac{3}{4}$: here the number 4, which ſhews into how many equal parts the unit is ſuppoſed to be divided, and ſo determines the true value, magnitude, or denomination of thoſe parts, is called the denominator of the fraction; and the number 3, which ſhews how many of theſe parts are conſidered in the fraction, is called the numerator: thus in the fraction $\frac{1}{2}$ or one half, 1 is the numerator, and 2 the denominator: in $\frac{2}{2}$ or two halves, 2 is both numerator and denominator, *&c.*

When a fraction is applied to any particular quantity, that quantity is called the integer to the fraction; thus in $\frac{3}{4}$ of a penny, a penny is the integer;

teger; in three fourths of ſix, the number 6 is the integer; thus in three fourths of five ſixths, the fraction five ſixths is the integer; for though in an abſolute ſenſe it be a fraction, yet here, with reſpect to the fraction three fourths, it is an integer: and thus may one and the ſame quantity, under different ways of conception, be both an integer and a fraction; as a foot is an integer, and a third part of a yard is a fraction, though they both ſignify the ſame thing. When the integer to a fraction is not expreſſed, unity is always to be underſtood. Thus $\frac{3}{4}$ is $\frac{3}{4}$ of an unit; thus when we ſay, $\frac{1}{3}$ and $\frac{1}{4}$ make $\frac{7}{12}$, the meaning is, that if $\frac{1}{3}$ part of an unit, and $\frac{1}{4}$ part of an unit be added together, the ſum will amount to the ſame as if that unit had been divided into 12 equal parts, and 7 of thoſe parts had been taken. Thus again, when we ſay that $\frac{2}{3}$ of $\frac{4}{5}$ are equivalent to $\frac{8}{15}$, we mean, that if an unit be divided into 5 equal parts, and 4 of them be taken, and then this fraction $\frac{4}{5}$ be again divided into 3 equal parts, and two of them be taken, the reſult will be the ſame as if the unit had at firſt been divided into 15 equal parts, and 8 of them had been taken; and whatever is true in the caſe of unity, will be equally true in the caſe of any other integer whatever. Thus if it be true that $\frac{1}{3}$ and $\frac{1}{4}$ of an unit are equal to $\frac{7}{12}$ of an unit, that is, if it be true in general that $\frac{1}{3}$ and $\frac{1}{4}$ added together are equal to $\frac{7}{12}$, it will be as true of any particular integer, ſuppoſe of a pound ſterling, that $\frac{1}{3}$ of a pound, and $\frac{1}{4}$ of a pound when added together, are equal to $\frac{7}{12}$ of a pound; again, if it be true in general that $\frac{2}{3}$ of $\frac{4}{5}$ are equal to $\frac{8}{15}$, it is as true in particular that $\frac{2}{3}$ of $\frac{4}{5}$ of a pound are equivalent to $\frac{8}{15}$ of a pound, *&c.*

Of

Of proper and improper fractions; and of the reduction of an improper fraction to a whole or mixt number.

2. Fractions are of two ſorts, proper and improper; a proper fraction is that, whoſe numerator is leſs than the denominator, as $\frac{1}{2}$; therefore an improper one is that, whoſe numerator is equal to, or greater than, the denominator, as $\frac{2}{2}$, $\frac{3}{2}$, *&c.*

OBJECTION.

But is there no abſurdity in the ſuppoſition of an improper fraction, as in three halves for inſtance, conſidering that an unit cannot be divided into more than two halves? *Anſwer:* No more than there is in ſuppoſing three halfpence to be the price of any thing, conſidering that a penny cannot be divided into above two halfpence. Theſe fractions therefore are called improper, not from any abſurdity either in the ſuppoſition or in the expreſſion, but becauſe they may be more properly and more intelligibly expreſſed, either by a whole number, or at leaſt by a mixt number conſiſting of a whole number and a fraction; as for example, if the numerator of a fraction be equal to the denominator, as $\frac{4}{4}$, that fraction will always be equivalent to unity, as $\frac{4}{4}$ of an hour, that is, four quarters of an hour, are equivalent to one hour, $\frac{4}{4}$ of a penny, that is, 4 farthings, are equal to one penny, *&c:* and the reaſon is plain; for if an unit be divided into four equal parts, and four of theſe parts be expreſſed in a fraction, the whole unit is expreſſed in that fraction, that is, ſuch a fraction muſt always be looked upon as equal to an unit: therefore if the numerator be double of the denominator, as $\frac{8}{4}$, the fraction muſt be equal to the number 2, becauſe $\frac{8}{4}$ contain $\frac{4}{4}$ or 1 twice; in like manner $\frac{12}{4}$ are equal to,

and

and may be more properly expreſſed by, the number 3; $\frac{16}{4}$ by the number 4, *&c:* and univerſally, as often as the numerator of a fraction contains the denominator, ſo many units is that fraction equivalent to: But to find how often the numerator contains the denominator, is to divide the numerator by the denominator; therefore if the numerator of an improper fraction be divided by the denominator, the quotient, if nothing remains, will be the whole number by which the fraction may be expreſſed; but if any thing remains of this diviſion, then the quotient, together with a fraction whoſe numerator is that remainder, and denominator the diviſor, will be a mixt number, expreſſing the fraction propoſed. Thus $\frac{24}{3}$ are equivalent to the whole number 8, but $\frac{25}{3}$ are equivalent to the mixt number $8\frac{1}{3}$, $\frac{26}{3}$ to the mixt number $8\frac{2}{3}$, juſt as 24 feet are equal to 8 yards, 25 feet to 8 yards and 1 foot, 26 feet to 8 yards and 2 feet, *&c:* and this is what we call the reduction of an improper fraction into a whole or mixt number.

The reduction of a whole or mixt number into an improper fraction.

3. As unity may be expreſſed by any fraction of any form or denomination whatever, provided the numerator be equal to the denominator, as $\frac{2}{2}$, $\frac{3}{3}$, $\frac{4}{4}$, *&c*; ſo the number 2 is reducible to any fraction whoſe numerator is double the denominator, as $\frac{4}{2}$, $\frac{6}{3}$, $\frac{8}{4}$, *&c*; and ſo is every number reducible to any fraction, whoſe numerator contains the denominator as often as there are units in the number propoſed: therefore whenever a whole number is to be reduced to a fraction whoſe denominator is given, it muſt be multiplied by that given denominator, and the product with that denominator under it, will be the equivalent fraction. Thus, if the number 5 is to be reduced

reduced into halves, that is, into a fraction whose denominator is 2, it must be multiplied by 2, and so you will have 5 equal to $\frac{10}{2}$, just as 5 pence are equivalent to 10 halfpence; if the number 8 is to be reduced into thirds, it must be multiplied by 3, and so you will have 8 equal to $\frac{24}{3}$, just as 8 yards are equal to 24 feet; lastly, if the number 2 is to be reduced into fourths, it will be equal to $\frac{8}{4}$, just as 2 pence are equal to 8 farthings. If the number to be reduced be a mixt number, consisting of a whole number and a fraction, the whole number must always be reduced to the same denomination with the fraction annexed, and the rule will be this: Multiply the whole number by the denominator of the fraction annexed; add the numerator to the product, and the sum with the denominator under it will be the equivalent fraction. Thus the mixt number $5\frac{1}{2}$ is equivalent to $\frac{11}{2}$, just as 5 pence halfpenny in money is equivalent to 11 halfpence: This operation carries its own evidence along with it; for the number 5 itself is equal to $\frac{10}{2}$ as above; therefore $5\frac{1}{2}$ must be equivalent to $\frac{11}{2}$: again, the number $8\frac{2}{3}$ is equal to $\frac{26}{3}$, just as 8 yards and 2 feet over are equivalent to 26 feet; lastly, $2\frac{3}{4}$ is reducible to $\frac{11}{4}$, just as two pence and 3 farthings are reducible to 11 farthings.

A Lemma.

4. *If any integer be assumed, as a pound sterling, and also any fraction, as* $\frac{3}{4}$, *I say then, that* $\frac{3}{4}$ *parts of one pound amount to the same as* $\frac{1}{4}$ *part of 3 pounds.*

To demonstrate this Lemma (which scarce wants a demonstration) I argue thus: If any quantity, greater or less, be always divided into the same number of parts, the greater or less the quantity so divided is, the greater or less will the parts be. Thus $\frac{1}{4}$ of a yard is 3 times as much as $\frac{1}{4}$ of a foot; because a yard is 3 times as much as a foot; and for the same

ſame reaſon $\frac{1}{4}$ of 3 pounds is 3 times as much as $\frac{1}{4}$ of 1 pound; but $\frac{1}{4}$ of one pound are alſo 3 times as much as $\frac{1}{4}$ of one pound; therefore $\frac{1}{4}$ of 1 pound are equal to $\frac{1}{4}$ of 3 pounds, becauſe both are juſt 3 times as much as $\frac{1}{4}$ of 1 pound. *Q. E. D.*

How to eſtimate any fractional parts of an Integer in parts of a leſſer denomination, and vice verſâ.

5. This may be done various ways; but the ſhorteſt and ſafeſt, as I take it, is that which follows: Suppoſe I had a mind to know the value of $\frac{5}{6}$ of a pound; I ſhould argue as in the foregoing lemma, that $\frac{5}{6}$ of one pound are the ſame as $\frac{1}{6}$ of 5 pounds, but the latter is more eaſily taken than the former; therefore I apply myſelf wholly to the latter, to wit, to find the ſixth part of five pounds, thus: 5 pounds, or 100 ſhillings, divided by 6, quote 16 ſhillings, and there remain 4 ſhillings; again, 4 ſhillings, or 48 pence, divided by 6, quote 8 pence, and there remains nothing; therefore the value of 1 ſixth of 5 pounds, or $\frac{5}{6}$ of 1 pound, is 16 ſhillings and 8 pence. Again, ſuppoſe I would know the value of $\frac{6}{7}$ of a pound, I find the value of $\frac{1}{7}$ of 6 pounds thus; 6 pounds, or 120 ſhillings, divided by 7, give 17 ſhillings, and there remains 1 ſhilling; again, 1 ſhilling, or 12 pence, divided by 7, gives 1 penny, and there remain 5 pence; again, 5 pence, or 20 farthings, divided by 7, give 2 farthings, and there remain 6 farthings; laſtly, a ſeventh part of 6 farthings is juſt as much as $\frac{6}{7}$ of 1 farthing, by the lemma: hence I conclude, that $\frac{6}{7}$ of a pound are 17 ſhillings 1 penny 2 farthings and $\frac{6}{7}$ of a farthing: But the value of $\frac{6}{7}$ of a farthing is ſo near to one farthing, that if I would rather admit of a ſmall inaccuracy in my account, than a fraction, I ſhould make the value of $\frac{6}{7}$ of a pound to be 17 ſhillings

1 penny and 3 farthings. Laſtly, ſuppoſe I would know the amount of $\frac{2}{3}$ parts of 17 ſhillings and 6 pence, I ſhould argue thus; $\frac{2}{3}$ parts of 17 ſhillings and 6 pence are equivalent to $\frac{1}{3}$ part of twice as much, that is, to $\frac{1}{3}$ part of 35 ſhillings: but $\frac{1}{3}$ part of 35 ſhillings is 11 ſhillings and 8 pence; therefore $\frac{2}{3}$ parts of 17 ſhillings and 6 pence make 11 ſhillings and 8 pence.

Of the reverſe of this reduction, one ſingle inſtance will ſuffice: Let it then be required to reduce 1 ſhilling 2 pence 3 farthings to fractional parts of a pound: here I conſider, that in 1 pound are 960 farthings; and in 1 ſhilling 2 pence 3 farthings, are 59 farthings; therefore 1 farthing is $\frac{1}{960}$ of a pound; and 1 ſhilling 2 pence 3 farthings are $\frac{59}{960}$ of a pound.

Preparations for further reductions and operations of fractions.

6. All the operations and reductions of fractions are mediately or immediately deducible from the following principle; which is, that *If the numerator of a fraction be encreaſed, whilſt the denominator continues the ſame, the value of the fraction will be encreaſed proportionably: and* vice verſâ. *On the other hand, if the denominator be encreaſed in any proportion, whilſt the numerator continues the ſame, the value of the fraction will be diminiſhed in a contrary proportion; and* vice verſâ. Thus $\frac{2}{3}$ are twice as much as $\frac{1}{3}$, and $\frac{1}{9}$ is but half as much.

From this principle it follows, that if the numerator and denominator of a fraction be both multiplied, or both divided, by the ſame number, the value of the fraction will not be affected thereby; becauſe, as much as the fraction is encreaſed by multiplying the numerator, juſt ſo much again it will be diminiſhed by multiplying the denominator; and as much as the fraction is diminiſhed by dividing

ing the numerator, juſt ſo much again it will be encreaſed by dividing the denominator. Thus the terms of the fraction $\frac{3}{4}$ being doubled, produce $\frac{6}{8}$, a fraction of the ſame value; and, on the contrary, the terms of the fraction $\frac{6}{8}$ being halved, give $\frac{3}{4}$.

Hence it appears, that every fraction is capable of infinite variety of expreſſion, ſince there is infinite choice of multiplicators, whereby the numerator and denominator of a fraction may be multiplied, and ſo the expreſſion may be changed, without changing the value of the fraction. Thus the fraction $\frac{1}{2}$, if both the numerator and denominator be multiplied by 2, becomes $\frac{2}{4}$; if by 3, $\frac{3}{6}$; if by 4, $\frac{4}{8}$; if by 5 $\frac{5}{10}$; and ſo on *ad infinitum*; all which are nothing elſe but different expreſſions of the ſame fraction; therefore, in the midſt of ſo much variety, we muſt not expect that every fraction we meet with ſhould always be in its leaſt, or loweſt terms; but how to reduce them to this ſtate whenever they happen to be otherwiſe, ſhall be the buſineſs of the next article.

The reduction of fractions from higher to lower terms.

7. Whenever a fraction is ſuſpected not to be in its leaſt terms, find out, if poſſible, ſome number that will divide both the numerator and denominator of the fraction without any remainder; for if ſuch a number can be found, and the diviſion be made, the two quotients thence ariſing will exhibit reſpectively the numerator and denominator of a fraction, equal to the fraction firſt propoſed, but expreſſed in more ſimple terms: this is evident from the laſt article. As for example; let the fraction $\frac{10}{15}$ be propoſed to be reduced: here, to find ſome number that will divide both the numbers 10 and 15 without any remainder, I begin with the number 2, as being the firſt whole number that can have any

effect in diviſion; but I find 2 will not divide 15; 3 is the next number to be tried; but neither will that ſucceed, for it will not divide 10; as for the number 4, I paſs that by, becauſe if 2 would not divide 15, much leſs will 4 do it; the next number I try is 5, and that ſucceeds; for if 10 and 15 be divided by 5, the quotients will be 2 and 3 reſpectively, each without remainder; therefore the fraction $\frac{10}{15}$, after being reduced to its leaſt terms, is found to be the ſame as $\frac{2}{3}$; that is, if an unit be divided into 15 equal parts, and 10 of them be taken, the amount will be the ſame as if it had been divided into 3 equal parts, and 2 of them had been taken. Secondly, if the fraction propoſed to be reduced be $\frac{2520}{7560}$, divide its terms by 2, and you will have the fraction $\frac{1260}{3780}$; divide again by 2, and you will have $\frac{630}{1890}$; divide again by 2, and you will have $\frac{315}{945}$; therefore all further diviſion by 2 is excluded: divide then theſe laſt terms by 3, and you will have $\frac{105}{315}$; divide again by 3, and you will have $\frac{35}{105}$; divide by 5, and you will have $\frac{7}{21}$; and laſtly, divide by 7, and you will have $\frac{1}{3}$; ſo that the fraction $\frac{2520}{7560}$, after a common diviſion by 2, 2, 2, 3, 3, 5, 7, is found at laſt equal to $\frac{1}{3}$. Thirdly, the fraction $\frac{36}{48}$, after a continual diviſion by 2, 2, 3, becomes $\frac{3}{4}$. Fourthly, $\frac{56}{84}$, after a continual diviſion by 2, 2, 7, becomes $\frac{2}{3}$. Fifthly, $\frac{144}{180}$, after a continual diviſion by 2, 2, 3, 3, becomes $\frac{4}{5}$. Sixthly, $\frac{42}{126}$, after a continual diviſion by 2, 3, and 7, becomes $\frac{1}{3}$. Seventhly, $\frac{315}{840}$, after a

continual diviſion by 3, 5, 7, becomes $\frac{1}{7}$. Eighthly, $\frac{35}{840}$, after a continual diviſion by 5 and 7, becomes $\frac{1}{24}$. Ninthly, $\frac{735}{245}$, after a continual diviſion by 5, 7, 7, becomes $\frac{3}{1}$, or 3.

Some perhaps may think themſelves helped in the practice of this rule by the following obſervations:

Firſt, that 2 will divide any number that ends with an even number, or with a cypher, as 36, 30, *&c.* and no other.

Secondly, that 5 will divide any number that ends with a 5, or with a cypher, as 75, 70, *&c.* and no other.

Thirdly, that 3 will divide any number, when it will divide the ſum of its digits added together: thus 3 will divide 471, becauſe it will divide the number 12, which is the ſum of the numbers 4, 7, and 1.

Fourthly, if both the numerator and denominator have cyphers annexed to them, throw away as many as are common to both: thus $\frac{3500}{56000}$ is the ſame as $\frac{35}{560}$, or $\frac{7}{112}$, or $\frac{1}{16}$.

After all, there is a certain and infallible rule for finding the greateſt common diviſor of any two numbers whatever, that have one, whereby a fraction may be reduced to its leaſt terms by one ſingle operation only. I ſhall be forced indeed to poſtpone the demonſtration of this rule to a more convenient place, not ſo much for want of principles to proceed upon, as for want of a proper notation; but the rule itſelf is as follows: Let a and b be two given numbers, whoſe greateſt common diviſor is required; to wit, a the greater, and b the leſs: then, dividing a by b without any regard to the quotient, call the remainder c; divide again b by c, and call the remainder d;

then divide c by d, and call the remainder e; then divide d by e, and call the remainder f; and ſo proceed on, till at laſt you come to ſome diviſor, as f, which will divide the preceding number e without a remainder: I ſay then, that this laſt diviſor will be the greateſt common diviſor of the two given numbers a and b. As for example; let a be 1344 and b 582: then, to find the greateſt common diviſor of theſe numbers, I divide a (1344) by b (582) and there remains 180, which I call c; then I divide b (582) by c (180) and there remains 42, which I call d; then I divide c (180) by d (42) and there remains 12, which I call e; then I divide d (42) by e (12) and there remains 6, which I call f; laſtly I divide e (12) by f (6) and there remains nothing: whence I conclude that 6 is the greateſt common diviſor of the two numbers 1344 and 582; and as the quotients by 6 are 224 and 97, it follows, that the fraction $\frac{582}{1344}$, when reduced to its leaſt terms, will be $\frac{97}{224}$. If no common diviſor can be found but unity, it is an argument that the fraction is in its leaſt terms already.

From this and the laſt article it follows, that all fractions that are reducible to the ſame leaſt terms are equal; as $\frac{4}{6}$, $\frac{6}{9}$, $\frac{10}{15}$, *&c.* which are all reducible to $\frac{2}{3}$; though it does not follow *è converſo*, that all equal fractions are reducible to the ſame leaſt terms; this will be demonſtrated in another place. (See *Elements of Algebra*, Art. 193. page 290, 4to.)

For the better underſtanding of the following article, it muſt be obſerved, that this mark $\times$ is a ſign of multiplication, and is uſually read *into:* thus 2×3 ſignifies 6, $2 \times 3 \times 4$ ſignifies 24, $2 \times 3 \times 4 \times 5$ ſignifies 120, *&c.*; and in ſome caſes it will be better to put down theſe components or factors, than the character of the number ariſing from their continual multiplication, as in the following article. It ought

also to be observed, that it matters not in what order these components are placed; for $2 \times 3 \times 4 \times 5$ signifies just the same as $4 \times 5 \times 2 \times 3$, *&c.*

The reduction of fractions of different denominations, to others of the same denomination.

8. There is another reduction of fractions, no less useful than the former; and that is, the reduction of fractions of different denominations to others of the same denomination, or which have the same denominator, without changing their values; which is done as follows: Having first put down the fractions to be reduced, in any order, one after another, and beginning with the numerator of the first fraction, multiply it, by a continual multiplication, into all the denominators but its own, and put down the product under that fraction; then multiply, in like manner, the numerator of the next fraction into all the denominators but its own, and put down the product under that fraction; and so proceed on through all the numerators, always taking care to except the denominator of that fraction whose numerator is multiplied. Then, multiplying all the denominators together, put down the product under every one of the products last found, and you will have a new set of fractions, all of the same denomination with one another, and all of the same values with their respective original ones. As for example; let it be proposed to reduce the following fractions to the same denomination, $\frac{1}{2}$, $\frac{3}{4}$, $\frac{5}{6}$, $\frac{7}{8}$; *1st*, The numerator of the first fraction is 1, and the denominators of the rest are, 4, 6, and 8, and $1 \times 4 \times 6 \times 8$ gives 192; therefore I put down 192 under $\frac{1}{2}$. *2dly*, The numerator of the second fraction is 3, and the denominators of the rest are 6, 8, and 2, and $3 \times 6 \times 8 \times 2$ gives 288; therefore I put down 288 under $\frac{3}{4}$. *3dly*, $5 \times 8 \times 2 \times 4$ gives 320; therefore I put down 320 under $\frac{5}{6}$. *4th*, $7 \times 2 \times 4 \times 6$ gives 336; there-

fore

fore I put down 336 under $\frac{7}{8}$. Laſtly, $2 \times 4 \times 6 \times 8$, or the product of all the denominators, is 384. This therefore I put down under every one of the numerators laſt found, and ſo have a new ſet of fractions, *viz.* $\frac{192}{384}$, $\frac{288}{384}$, $\frac{320}{384}$, $\frac{336}{384}$, all of the ſame denomination, as appears from the operation itſelf; and all of the ſame value with their reſpective original ones, as will appear preſently; but firſt ſee the work:

$$\frac{1}{2}. \quad \frac{3}{4}. \quad \frac{5}{6}. \quad \frac{7}{8}.$$
$$\frac{192}{384}. \quad \frac{288}{384}. \quad \frac{320}{384}. \quad \frac{336}{384}.$$

A demonſtration of the rule.

All that is to be demonſtrated in this rule is, to prove from the nature of the operation itſelf, that the original fractions ſuffer nothing in their values by this reduction: in order to which, it will be convenient to put down the components of the new numerators inſtead of their proper characters, as in the laſt article; as alſo thoſe of the common denominator, and the work will ſtand thus:

$$\frac{1}{2}. \quad \frac{3}{4}. \quad \frac{5}{6}. \quad \frac{7}{8}.$$
$$\frac{1\times4\times6\times8}{2\times4\times6\times8}. \quad \frac{3\times6\times8\times2}{4\times6\times8\times2}. \quad \frac{5\times8\times2\times4}{6\times8\times2\times4}. \quad \frac{7\times2\times4\times6}{8\times2\times4\times6}.$$

By this method of operation it appears, that the numerator and denominator of the firſt fraction $\frac{1}{2}$, are both multiplied by the ſame number in the reduction, to wit, by $4 \times 6 \times 8$; and therefore that fraction ſuffers nothing in its value, by art. 6. In like manner, the terms of the ſecond fraction $\frac{3}{4}$ are both multiplied by the ſame number $6 \times 8 \times 2$; therefore that fraction can ſuffer nothing in its value; and the ſame may be ſaid of all the reſt. *Q. E. D.*

Other examples to this rule.

$\frac{1}{2}$. $\frac{1}{3}$. $\frac{1}{4}$. $\frac{1}{5}$. $\frac{1}{6}$.

$\frac{360}{720}$. $\frac{240}{720}$. $\frac{180}{720}$. $\frac{144}{720}$. $\frac{120}{720}$.

$\frac{1}{3}$. $\frac{1}{4}$. $\frac{1}{5}$. $\frac{1}{6}$.

$\frac{120}{360}$. $\frac{90}{360}$. $\frac{72}{360}$. $\frac{60}{360}$.

$\frac{1}{4}$. $\frac{1}{5}$. $\frac{1}{6}$.

$\frac{30}{120}$. $\frac{24}{120}$. $\frac{20}{120}$.

$\frac{1}{5}$. $\frac{1}{6}$.

$\frac{6}{30}$. $\frac{5}{30}$.

The uſe of this rule will ſoon appear in the addition and ſubtraction of fractions: in the mean time it may not be amiſs to obſerve, that it would be very difficult, if not impoſſible, to compare fractions of different denominations, without firſt reducing them to the ſame. As for inſtance; ſuppoſe it ſhould be aſked, which of theſe two fractions is the greater; $\frac{3}{4}$, or $\frac{5}{7}$; in this view it would be difficult to determine the queſtion; but when I know that $\frac{3}{4}$ are the ſame with $\frac{21}{28}$, and that $\frac{5}{7}$ are the ſame with $\frac{20}{28}$, I know then, that $\frac{3}{4}$ are greater than $\frac{5}{7}$ by a twenty-eighth part of the whole. We now proceed to the four operations of fractions, to wit, their addition, ſubtraction, multiplication, and diviſion: and firſt,

Of the addition of fractions.

9. Whenever two or more fractions are to be added together, let them firſt be reduced to the ſame denomination, if they be not ſo already; and then, adding the new numerators together, put down the ſum with the common denominator under it. In the caſe of mixt numbers, add firſt the fractions together, and then the whole numbers: but if the fractions, when added together, make an improper fraction, reduce it by the 2d art. to a whole or mixt number; and then putting down the fractional part, if there be any, reſerve the whole number for the place of integers.

To

To this rule might be referred (if it had not been taught already in the 3d art.) the reduction of a mixt number into an improper fraction, which is nothing elſe but adding a whole number and a fraction together, and may be done by conſidering the whole number as a fraction whoſe denominator is unity.

Examples of addition of fractions.

1*ſt*, $\frac{3}{10}$ and $\frac{4}{10}$ when added together make $\frac{7}{10}$, for juſt the ſame reaſon as 3 ſhillings and 4 ſhillings when added together make 7 ſhillings.

2*dly*, The fractions $\frac{1}{3}$ and $\frac{1}{4}$ when reduced to the ſame denomination by the laſt art. are $\frac{4}{12}$ and $\frac{3}{12}$, and theſe added together make $\frac{7}{12}$; therefore the fractions $\frac{1}{3}$ and $\frac{1}{4}$ when added together make up the fraction $\frac{7}{12}$:

For a better confirmation of theſe abſtract concluſions, but chiefly to inure the learner to conceive and reaſon diſtinctly about fractions, it may be very convenient to apply theſe examples in ſome particular caſe; as for inſtance, in the caſe of a pound ſterling; and if we do ſo here, we are to try, whether $\frac{1}{3}$ and $\frac{1}{4}$ of a pound, when added together, amount to $\frac{7}{12}$ of a pound, or not: here then we ſhall find by diviſion, that the third part of a pound is 6 ſhillings and 8 pence, and the fourth part 5 ſhillings; and theſe, added together, make 11 ſhillings and 8 pence; therefore $\frac{1}{3}$ and $\frac{1}{4}$ of a pound, when added together, make 11 ſhillings and 8 pence; but by the 5th art. it will be found that $\frac{7}{12}$ of a pound are alſo 11 ſhillings and 8 pence; therefore $\frac{1}{3}$ and $\frac{1}{4}$ of a pound, when added together, make $\frac{7}{12}$ of a pound; and the ſame would have been true in any other inſtance whatever.

3*dly*, $\frac{2}{5}$ and $\frac{3}{8}$, that is, $\frac{16}{40}$, and $\frac{15}{40}$, when added together, make $\frac{31}{40}$, which will alſo be true in the caſe of a pound ſterling; for by the 5th art. $\frac{2}{5}$ of a pound are 8 ſhillings, $\frac{3}{8}$ of a pound are 7 ſhillings and 6 pence, and their ſum is 15 ſhillings and 6 pence; which will alſo be found to be the value of

$\frac{3}{4}\frac{1}{5}$ of a pound; therefore $\frac{2}{3}$ and $\frac{3}{4}$ of a pound, when added together, make $\frac{3}{4}\frac{1}{5}$ of a pound.

4*thly*, $\frac{2}{3}$ and $\frac{4}{5}$, that is, $\frac{10}{15}$ and $\frac{12}{15}$, when added together, make $\frac{22}{15}$ an improper fraction; which being reduced to a mixt number, by the 2d art. is 1 and $\frac{7}{15}$: let us now try, whether $\frac{2}{3}$ of a pound, and $\frac{4}{5}$ of a pound when added together will make one pound and $\frac{7}{15}$ of a pound over, or not: now $\frac{2}{3}$ of a pound, or 13 shillings and 4 pence, added to $\frac{4}{5}$ of a pound, or 16 shillings, amount to 1 pound 9 shillings and 4 pence: and $\frac{7}{15}$ of a pound are found to be 9 shillings and 4 pence; therefore $\frac{2}{3}$ and $\frac{4}{5}$ of a pound, when added together, make one pound and $\frac{7}{15}$ of a pound over.

5*thly*, $\frac{3}{4}$ and $\frac{5}{6}$, that is, $\frac{18}{24}$ and $\frac{20}{24}$, when added together, make $\frac{38}{24}$, or $\frac{19}{12}$, which will also be true in the case of a pound sterling.

6*thly*, $\frac{1}{2}$, $\frac{1}{3}$, $\frac{1}{4}$, $\frac{1}{5}$, $\frac{1}{6}$, that is, $\frac{360}{720}$, $\frac{240}{720}$, $\frac{180}{720}$, $\frac{144}{720}$, $\frac{120}{720}$, when added together, make $\frac{1044}{720}$, that is, $1\frac{324}{720}$; try it in money.

7*thly*, $\frac{1}{2}$, $\frac{2}{3}$, $\frac{3}{4}$, $\frac{4}{5}$, and $\frac{5}{6}$, that is, $\frac{360}{720}$, $\frac{480}{720}$, $\frac{540}{720}$, $\frac{576}{720}$ and $\frac{600}{720}$, when added together, make $\frac{2556}{720}$, that is, $3\frac{396}{720}$.

8*thly*, The sum of the mixt numbers $7\frac{1}{3}$ and $8\frac{1}{4}$ is $15\frac{7}{12}$; for the sum of the fractions is $\frac{7}{12}$ by the second example, and the sum of the whole numbers is 15.

9*thly*, $5\frac{2}{3}$ added to $7\frac{4}{5}$ gives $13\frac{7}{15}$; for the sum of the fractions is $1\frac{7}{15}$; by the fourth example; and the whole number 1, added to the whole numbers 5 and 7, gives 13.

10*thly*, $8\frac{1}{4}$, $9\frac{2}{3}$, $10\frac{3}{4}$, $11\frac{4}{5}$, $12\frac{5}{6}$, added together, make $53\frac{119}{240}$; for the fractions themselves make $3\frac{119}{240}$ by the seventh example, and the whole number 3 added to the rest makes 53.

11*thly*,

11*thly*, The whole number 2 added to the fraction $\frac{3}{4}$ gives $\frac{11}{4}$; for the whole number 2 may be conſidered as a fraction, whoſe denominator is unity; now $\frac{2}{1}$ and $\frac{3}{4}$, when reduced to the ſame denomination, are $\frac{8}{4}$ and $\frac{3}{4}$, which added together make $\frac{11}{4}$.

Thus alſo may unity be added to any fraction whatever, when ſubtraction requires it; but better thus: unity may be made a fraction of any denomination whatever, provided the numerator be equal to the denominator, by art. 2d: ſuppoſe then I would add unity to $\frac{2}{3}$; I ſuppoſe unity equal to $\frac{3}{3}$, and this added to $\frac{2}{3}$ makes $\frac{5}{3}$: again, unity added to $\frac{3}{5}$ makes $\frac{8}{5}$, becauſe $\frac{5}{5}$ and $\frac{3}{5}$ make $\frac{8}{5}$.

Of the ſubtraction of fractions.

10. Whenever a leſs fraction is to be ſubtracted from a greater, they muſt be prepared as in addition; that is, they muſt be reduced to the ſame denomination, if they be not ſo already; then, ſubtracting the numerator of the leſs fraction from that of the greater, put down the remainder with the common denominator under it. In the caſe of mixt numbers, ſubtract firſt the fraction of the leſſer number from that of the greater, and then the leſſer whole number from the greater; but if, as it often happens, the greater number has the leſſer fraction belonging to it, then an unit muſt be borrowed from the whole number and added to the fraction, as intimated in the cloſe of the laſt article.

Examples of ſubtraction in fractions.

1*ſt*, $\frac{3}{10}$ ſubtracted from $\frac{4}{10}$ leaves $\frac{1}{10}$, juſt in the ſame manner as 3 ſhillings ſubtracted from 4 ſhillings leave 1 ſhilling.

2*dly*, $\frac{3}{4}$ ſubtracted from $\frac{5}{6}$, that is $\frac{18}{24}$ ſubtracted from $\frac{20}{24}$, leaves $\frac{2}{24}$, or $\frac{1}{12}$. So $\frac{3}{4}$ of a pound, or 15 ſhillings,

15 ſhillings, ſubtracted from $\frac{5}{6}$ of a pound, or 16 ſhillings and 8 pence, leaves $\frac{1}{12}$ of a pound, that is, 1 ſhilling and 8 pence.

3dly, $7\frac{1}{3}$ ſubtracted from $8\frac{1}{2}$, that is, $7\frac{2}{6}$ ſubtracted from $8\frac{3}{6}$, leaves $1\frac{1}{6}$.

4thly, $7\frac{3}{4}$ ſubtracted from $8\frac{1}{4}$, that is, $7\frac{3}{4}$ ſubtracted from $7\frac{5}{4}$, leaves $\frac{2}{4}$, or $\frac{1}{2}$; for here the greater number having the leſs fraction belonging to it, I borrow an unit from the whole number 8, and ſo reduce it to 7; and then this unit, under the name of $\frac{4}{4}$, I add to the fraction $\frac{1}{4}$, and ſo make it $\frac{5}{4}$.

5thly, $7\frac{2}{3}$ ſubtracted from $8\frac{1}{2}$, that is, $7\frac{2}{6}$ ſubtracted from $8\frac{3}{6}$, that is, $7\frac{4}{6}$ ſubtracted from $7\frac{9}{6}$, leaves $\frac{5}{6}$.

6thly, $7\frac{3}{5}$ ſubtracted from 8, that is, $7\frac{3}{5}$ ſubtracted from $7\frac{5}{5}$, leaves $\frac{2}{5}$.

Of the multiplication of fractions.

11. To multiply by a whole number is to take the multiplicand as often as that whole number expreſſes: therefore to multiply by a mixt number is, not only to take the multiplicand as often as the integral part expreſſes, but alſo to take ſuch a part or parts of it over and above, as is expreſſed by the fraction annexed. Thus 10 multiplied by $2\frac{1}{2}$ produces 25: for as $2\frac{1}{2}$ is a middle number between 2 and 3, ſo the product ought to be a middle number between 20 and 30, that is, 25: In like manner 10 multiplied by $1\frac{1}{2}$ produces 15, and being multiplied by $\frac{1}{2}$ produces 5: therefore to multiply by a proper fraction is nothing elſe but to take ſuch a part or parts of the multiplicand, as is expreſſed by that fraction. Certainly to take 10 twice and half of it over, once, and half of it over no times, and half of it over, (which laſt is taking the half of 10), are operations of the ſame kind, and differ only in degree one from another; and therefore, if the two former operations paſs by the name of multiplication, this laſt ought to

do

do ſo too; and if there be any abſurdity in the caſe, it lies in the name, and not in the thing.

Arithmetic was at firſt employed about whole numbers only, and thus far the name of multiplication was adequate enough, except in the caſe of unity. But it being afterwards conſidered, that no quantity whatever could be called an unit, that was not further diviſible; and conſequently, that there was not only an infinity of fractional numbers below unity, but alſo an infinity of mixt numbers between any two whole numbers whatever; it was judged, rightly enough, that the art of Arithmetic would not be perfect till its operations extended themſelves to this ſort of number alſo; and this being done without changing their names, it was then that the name of multiplication became too ſcanty for the thing ſignified: this therefore ought to be attributed to the unavoidable want of foreſight in the firſt impoſers, and not to any imperfection in the ſcience itſelf. This is no more than the caſe of many other arts and ſciences, that have outgrown their names. Thus Geometry, that originally and properly ſignified no more than the art of ſurveying, is now defined to be a ſcience treating of the nature and properties of all figures, or rather of the different modifications of extenſion and ſpace; ſo that now ſurveying is the leaſt and loweſt part of that ſcience. Thus Hydroſtatics, which originally ſignified no more than the art of weighing bodies in water, or rather the art of finding out the ſpecific gravities of bodies by weighing them in water, is now made the name of a ſcience, which treats of the nature and properties of fluids in general; and the ſeveral properties of air and mercury, ſo far as they are fluids, fall under the conſideration of Hydroſtatics, as properly as thoſe of water.

But perhaps it may be further urged, that to take the half of any quantity, is not to multiply, but to divide it. To which I anſwer; that it is impoſſible

to

to take the half of any quantity without dividing it by 2; and conſequently, that to multiply by $\frac{1}{2}$ has the ſame effect as to divide by 2; but this does not prove that multiplication is the ſame as diviſion, but only that theſe two operations, how contrary ſoever, may be made to do each other's buſineſs, which is no myſtery to any one who is the leaſt converſant in Arithmetic; and will be further explained in the next article.

A fraction may be multiplied by a whole number two ways; either by multiplying the numerator by that number, or elſe by dividing the denominator by the ſame, where ſuch a diviſion is poſſible: thus if the fraction $\frac{5}{6}$ be to be multiplied by 2, the product will either be $\frac{10}{6}$ by doubling the numerator, or $\frac{5}{3}$ by halving the denominator: this is evident from the 6th art. becauſe a fraction will be equally encreaſed, whether it be by encreaſing the numerator, or by diminiſhing the denominator.

If a fraction be to be multiplied by a fraction, multiply the numerator and denominator of the multiplicand, by the numerator and denominator of the multiplicator reſpectively, and the fraction thence ariſing will be the product ſought; thus if it was required to multiply $\frac{4}{5}$ by $\frac{2}{3}$, or (which amounts to the ſame thing) if it was required to determine how much is $\frac{2}{3}$ of $\frac{4}{5}$, the anſwer would be $\frac{8}{15}$; and the reaſon is plain; for $\frac{1}{3}$ of $\frac{4}{5}$ is $\frac{4}{15}$, by the ſixth art. becauſe making the denominator three times greater, makes the fraction three times leſs; but if $\frac{1}{3}$ of $\frac{4}{5}$ be $\frac{4}{15}$, then $\frac{2}{3}$ of $\frac{4}{5}$ ought to be twice as much, that is $\frac{8}{15}$; therefore to determine the amount of $\frac{2}{3}$ of $\frac{4}{5}$, the numerator and denominator of $\frac{4}{5}$ muſt be multiplied reſpectively by the numerator and denominator of $\frac{2}{3}$; and the ſame reaſon will hold good in all other inſtances.

If a whole number is to be multiplied by a fraction, either change the multiplicator and multiplicand one for another, and then proceed as above directed; or elſe

elſe conſider the multiplicand as a fraction whoſe denominator is unity, and ſo proceed according to the rule for multiplying one fraction by another; by which means both rules will be contracted into one. Thus 6, or $\frac{6}{1}$, multiplied into $\frac{2}{3}$, produces $\frac{12}{3}$, or 4.

If the multiplicator, or multiplicand, or both, be mixt numbers, they muſt firſt be reduced to improper fractions by the third art. and then be multiplied according to the general rule.

Examples of multiplication in fractions.

1ſt, $\frac{2}{3}$ of $\frac{7}{8}$, multiplying numerators together, and denominators together, is $\frac{14}{24}$, or $\frac{7}{12}$; and ſo we find it in any particular caſe; for $\frac{7}{8}$ of a pound are 17 ſhillings and 6 pence; and $\frac{2}{3}$ of 17 ſhillings and 6 pence, that is (by the 5th art.) $\frac{1}{3}$ of 35 ſhillings, is 11 ſhillings and 8 pence; therefore $\frac{2}{3}$ of $\frac{7}{8}$ of a pound are 11 ſhillings and 8 pence, which will alſo be found to be the value of $\frac{7}{12}$ of a pound.

Here we may obſerve once for all, that whenever two fractions are to be multiplied together, the product will be the ſame, which ſoever it is that multiplies the other, juſt as it is in whole numbers, and for the ſame reaſon; for if $\frac{7}{8}$ be to be multiplied by $\frac{2}{3}$, then the numbers 7 and 8 muſt be reſpectively multiplied by 2 and 3; but if $\frac{2}{3}$ is to be multiplied by $\frac{7}{8}$, then the numbers 2 and 3 muſt be reſpectively multiplied by 7 and 8, which amounts to the ſame thing; whence it follows, that $\frac{2}{3}$ of $\frac{7}{8}$ come to the ſame as $\frac{7}{8}$ of $\frac{2}{3}$: to confirm this, we have ſeen already that $\frac{2}{3}$ of $\frac{7}{8}$ of a pound amount to 11 ſhillings and 8 pence; let us in the next place enquire into the value of $\frac{7}{8}$ of $\frac{2}{3}$ of a pound: now $\frac{2}{3}$ of a pound are 13 ſhillings and 4 pence; and $\frac{7}{8}$ of 13 ſhillings and 4 pence, that is, $\frac{1}{8}$ of 93 ſhillings and 4 pence, is 11 ſhillings and 8 pence; therefore $\frac{2}{3}$ of $\frac{7}{8}$ of a pound are the ſame as $\frac{7}{8}$ of $\frac{2}{3}$ of a pound, ſince both amount to 11 ſhillings and 8 pence.

2dly, $\frac{2}{3}$ of $\frac{5}{6}$ of $\frac{9}{10}$ are $\frac{90}{180}$, or $\frac{1}{2}$; for 2 × 5 × 9 make 90, and 3 × 6 × 10 make 180: thus $\frac{9}{10}$ of a pound are 18 ſhillings; and $\frac{5}{6}$ of 18 ſhillings are 15 ſhillings; and $\frac{2}{3}$ of 15 ſhillings are 10 ſhillings; which are $\frac{1}{2}$ of a pound.

3dly, $\frac{3}{4}$ of $\frac{3}{4}$ of $\frac{3}{4}$ are $\frac{27}{64}$: thus $\frac{3}{4}$ of a pound are 15 ſhillings; and $\frac{3}{4}$ of 15 ſhillings are 11 ſhillings and 3 pence; and $\frac{3}{4}$ of 11 ſhillings and three pence are 8 ſhillings and 5 pence farthing; which will alſo be found to be the value of $\frac{27}{64}$ of a pound.

4thly, The mixt number 6 $\frac{3}{4}$ multiplied by the whole number 7, or the whole number 7 multiplied by the mixt number 6 $\frac{3}{4}$, will produce in either caſe 47 $\frac{1}{4}$: for the mixt number 6 $\frac{3}{4}$ being reduced (by the 3d art.) to an improper fraction, becomes $\frac{27}{4}$; which being multiplied by 7, or $\frac{7}{1}$, makes $\frac{189}{4}$, or, when reduced to a mixt number, 47 $\frac{1}{4}$.

This multiplication may alſo be made another way, thus: $\frac{3}{4}$ multiplied by 7 makes $\frac{21}{4}$, that is, (by the 2d art.) $5\frac{1}{4}$; put down the fraction $\frac{1}{4}$, and keep the 5 in reſerve; then 6 multiplied by 7 makes 42, which, with the 5 in reſerve, makes 47; therefore the whole product is 47 $\frac{1}{4}$ as before.

5thly, 3 $\frac{3}{4}$ multiplied by 2 $\frac{2}{3}$, that is, $\frac{15}{4}$ multiplied by $\frac{8}{3}$, makes $\frac{120}{12}$, that is, 10: thus 3 $\frac{3}{4}$ of a pound are 3 pounds 15 ſhillings; and twice 3 pounds 15 ſhillings is 7 pounds 10 ſhillings; moreover $\frac{2}{3}$ of 3 pounds 15 ſhillings, or $\frac{1}{3}$ of 7 pounds 10 ſhillings, is 2 pounds 10 ſhillings; and theſe 2 pounds 10 ſhillings, added to the former part of the product, to wit, 7 pounds 10 ſhillings, give 10 pounds for the whole product; therefore 3 $\frac{3}{4}$ of a pound multiplied by 2 $\frac{2}{3}$ make 10 pounds.

6thly,

6thly, 96 $\frac{1}{2}$ multiplied by 24 $\frac{1}{3}$, that is, $\frac{193}{2}$, multiplied by $\frac{73}{3}$, gives $\frac{14089}{6}$, that is, (by the 2d art.) 2348 $\frac{5}{6}$.

7thly, 36 $\frac{1}{4}$ multiplied into itſelf, that is, $\frac{145}{4}$, multiplied by $\frac{145}{4}$, makes $\frac{21025}{16}$, that is, 1314 $\frac{1}{16}$.

Before I put an end to this article, I do not know whether it will be thought worth my while to take notice of a very abſurd queſtion ſometimes bandied about, wherein it is required to multiply $\frac{1}{3}$ of a pound by $\frac{1}{2}$ of a pound: I call this a very abſurd queſtion, becauſe there is no manner of propriety in it; for in the very idea and definition of multiplication, the multiplicator at leaſt is ſuppoſed to be an abſtract number, or fraction; otherwiſe, what can be the meaning of taking the multiplicand as often, or as much of it, as is expreſſed by the multiplicator? If by multiplying $\frac{1}{3}$ of a pound by $\frac{1}{2}$ of a pound, be meant no more than multiplying $\frac{1}{3}$ of a pound by $\frac{1}{2}$, why is the word pound expreſſed in the multiplicator? and if there be any other meaning in it, why does not the propoſer explain it, ſince it is not expreſſed in the queſtion? Let him tell me what he means by multiplying 1 pound by 1 pound, and I will ſoon undertake to anſwer his queſtion. But if he neither can nor will do this, the queſtion neither deſerves nor is capable of an anſwer. I am not ignorant of another queſtion more frequently uſed than this, and of equal nonſenſe, if cuſtom had not explained it; and that is, to multiply 3 yards by 2 yards, and the like; whereby is meant, I ſuppoſe, to aſſign the number of ſquare yards contained in a rectangled parallelogram, or long ſquare, 3 yards in length, and 2 yards in breadth; but if this be the ſenſe put upon that queſtion by common conſent, that is all the title it has

has to it, there being no such thing either expreſſed, or ſo much as implied, in the terms of the queſtion.

A LEMMA.

12. *Let* n *be any whole number, mixt number, or fraction; I ſay then that the quotient of* n *divided by any fraction is equal to the product of* n *multiplied into the reverſe of that fraction:* as for inſtance,

Let n be divided by $\frac{3}{2}$; I ſay that the quotient of n divided by $\frac{3}{2}$, will be equal to the product of n multiplied by $\frac{2}{3}$: for let q be the quotient of n divided by $\frac{3}{2}$; that is, let q be a number expreſſing how often the fraction $\frac{3}{2}$ is contained in n; then will $\frac{3}{2}$ multiplied by q be equal to n, from the nature of multiplication; but the product of $\frac{3}{2}$ multiplied by q is the ſame with the product of q multiplied by $\frac{3}{2}$; that is, $\frac{3}{2}$ of q, by the laſt article; therefore n is equal to $\frac{3}{2}$ of q; therefore $\frac{1}{3}$ of n is equal to $\frac{1}{2}$ of q; therefore $\frac{2}{3}$ of n are equal to q; but $\frac{2}{3}$ of n is the product of n multiplied by $\frac{2}{3}$; therefore the product of n multiplied by $\frac{2}{3}$ is equal to q; but the quotient of n divided by $\frac{3}{2}$ was q, by the ſuppoſition; therefore the quotient of n divided by $\frac{3}{2}$, is equal to the product of n multiplied by $\frac{2}{3}$. *Q. E. D.*

COROLLARY.

Hence may the rule of diviſion be at any time changed into that of multiplication, only by inverting the terms of the diviſor, and then multiplying inſtead of dividing. The ſame will alſo obtain in whole numbers, if they be conſidered as fractions whoſe denominators are units: thus to divide n by 2, that is, $\frac{n}{1}$, will have the ſame effect as to multiply it by $\frac{1}{2}$, as was hinted in the foregoing article.

Of

Of the diviſion of fractions.

13. The diviſion of fractions, like all other diviſion, is, to find how often one fraction, called the diviſor, is contained in another, called the dividend; and that which ſhews this, is called the quotient, whether it be a whole number, a mixt number, or a proper fraction: for in fractional diviſion the quotient is always intended to be exact, without any remainder, and therefore muſt ſometimes be a whole number, ſometimes a mixt number, and ſometimes a proper fraction. Thus, if 18 is to be divided by 6, the quotient will be 3; becauſe 18 contains 6 3 times: but if 21 is to be divided by 6, the quotient will be $3\frac{1}{2}$; becauſe 21 contains 6 three times, and half of it over and above: laſtly, if 3 is to be divided by 6, the quotient will be $\frac{1}{2}$; becauſe here the diviſor, being greater than the dividend, cannot be ſo much as once contained in it, and therefore the quotient in this caſe muſt be a proper fraction, that is, $\frac{1}{2}$, ſince 3 is juſt the half of 6.

A fraction may be divided by a whole number two ways; either by dividing the numerator by that whole number when poſſible, or elſe by multiplying the denominator by the ſame: thus the half of $\frac{6}{7}$ may be taken, that is, $\frac{6}{7}$ may be divided by 2, either by halving the numerator, and the quotient will be $\frac{3}{7}$, or elſe by doubling the denominator, and then the quotient will be $\frac{6}{14}$, both which amount to the ſame thing, by the 6th and 7th articles.

If the diviſor be a fraction, the quotient may be had by multiplying the dividend into the inverted diviſor, according to the rules of multiplication already laid down: thus if $\frac{4}{5}$ is to be divided by $\frac{2}{3}$, the quotient will be the ſame as the product of $\frac{4}{5}$ multiplied by $\frac{3}{2}$, that is, $\frac{12}{10}$, or $1\frac{2}{5}$; the demonſtration whereof is contained in the laſt article.

And here again, as well as in the eleventh article, we are to obſerve, that if either the diviſor or dividend, or both, be mixt numbers, they muſt be reduced to improper fractions before the general rule can have place; and that, if either or both be whole numbers, they muſt be conſidered as fractions whoſe denominators are units.

From the general rule of diviſion before laid down it follows, that every fraction may be conſidered as the quotient of the numerator divided by the denominator, and that, whether the terms of the fraction under conſideration be whole numbers, or (which ſometimes happens) mixt numbers, or even pure fractions: a demonſtration of this laſt caſe will ſerve for all, ſince mixt numbers may be reduced to fractions, and whole numbers may be conſidered as fractions whoſe denominators are units. Let the fraction propoſed be $\frac{\frac{4}{5}}{\frac{2}{3}}$ I ſay, that this fraction is equal to the quotient ariſing from the diviſion of the numerator $\frac{4}{5}$ by the denominator $\frac{2}{3}$: to demonſtrate which, multiply both $\frac{4}{5}$ the numerator, and $\frac{2}{3}$ the denominator, by $\frac{3}{2}$ the inverted denominator, and the fraction will be changed into this, $\frac{12}{10}$, or $\frac{12}{10}$, being of the ſame value with the former, by the 6th art. but the quotient of $\frac{4}{5}$ divided by $\frac{2}{3}$ is alſo $\frac{12}{10}$ as above: therefore the fraction $\frac{\frac{4}{5}}{\frac{2}{3}}$ is equal to the quotient ariſing from the diviſion of the numerator by the denominator: and the ſame way of reaſoning may be uſed in any other inſtance. This conſideration is of very great uſe in Algebra, where quantities are very often ſo generally expreſſed, that there is no other way of repreſenting the quotient, but by a fraction whoſe numerator is the dividend, and denominator the diviſor. Hence alſo we are taught how to reduce a complicated fraction, into a ſimple one, whoſe numerator and denominator are whole numbers, to wit, by dividing the numerator by

by the denominator: thus we see that $\frac{\frac{4}{5}}{\frac{2}{5}}$ is the same as $\frac{4}{2}$.

Other examples of division in fractions.

1*st*, $\frac{5}{6}$ divided by $\frac{3}{4}$, or, which is the same thing, $\frac{5}{6}$ multiplied into $\frac{4}{3}$, makes $\frac{20}{18}$, or $1\frac{2}{9}$; which shews that $\frac{3}{4}$ is contained once, and $\frac{2}{9}$ part of it over and above, in $\frac{5}{6}$: for a further confirmation of this, $\frac{5}{6}$ of a pound are 16 shillings and 8 pence; and $\frac{3}{4}$ of a pound are 15 shillings: now 15 shillings are once contained in 16 shillings and 8 pence, and there is 1 shilling and 8 pence over; which 1 shilling and 8 pence is just $\frac{2}{9}$ of 15 shillings. To prevent oversights, the learner is to remember, that it is the terms of the divisor only that are to be inverted, and not those of the dividend: thus to divide $\frac{5}{6}$ by $\frac{3}{4}$ is the same as to multiply $\frac{5}{6}$ into $\frac{4}{3}$, but not the same as to multiply $\frac{6}{5}$ into $\frac{4}{3}$.

2*dly*, $\frac{9}{10}$ divided by $\frac{1}{3}$, or multiplied into $\frac{3}{1}$, make $\frac{27}{10}$, or $2\frac{7}{10}$; which may be confirmed like the former: for $\frac{9}{10}$ of a pound are 18 shillings; and $\frac{1}{3}$ of a pound is 6 shillings and 8 pence: now 6 shillings and 8 pence are twice contained in 18 shillings, and there are 4 shillings and 8 pence over; which 4 shillings and 8 pence will be found by the 5th art. to be just $\frac{7}{10}$ of 6 shillings and 8 pence.

3*dly*, The whole number 10 divided by $2\frac{1}{3}$, that is $\frac{10}{1}$ divided by $\frac{7}{3}$, or multiplied into $\frac{3}{7}$, makes $\frac{30}{7}$, or $3\frac{3}{7}$.

4*thly*, $2\frac{2}{3}$ divided by $\frac{10}{1}$, or $\frac{8}{3}$ divided by $\frac{10}{1}$, or multiplied into $\frac{1}{10}$, makes $\frac{8}{30}$, or $\frac{4}{15}$.

5*thly*, $16\frac{1}{3}$ divided by $1\frac{1}{6}$, that is, $\frac{49}{3}$ divided by $\frac{7}{6}$, or multiplied into $\frac{6}{7}$, makes $\frac{294}{21}$, or 14.

Further obſervations concerning multiplication and diviſion in fractions.

14. When two fractions are multiplied together, or one is divided by the other, it often happens, that though the original fractions be both in their leaſt terms, yet the product, or quotient from them, ſhall be otherwiſe, and require a further reduction: as for inſtance, the fractions $\frac{5}{6}$ and $\frac{9}{10}$ are both in their leaſt terms; and yet, if they be multiplied together, their product $\frac{45}{60}$ is ſo far from being in its leaſt terms, that it may be reduced to $\frac{3}{4}$: ſo again in diviſion, $\frac{9}{10}$ and $\frac{15}{16}$ are fractions both in their leaſt terms; and yet if the latter be divided by the former, the quotient $\frac{150}{144}$ is reducible to $\frac{25}{24}$. It may not be amiſs, therefore, to enquire into the cauſe of this, and ſee whether the original fractions may be ſo prepared beforehand, as that the product, or quotient, ſhall always come out in its leaſt terms. Firſt then, as to the multiplication of $\frac{5}{6}$ and $\frac{9}{10}$; here it is eaſy to ſee, that the product of $\frac{5}{6}$ and $\frac{9}{10}$ multiplied together, will juſt amount to the ſame as that of $\frac{5}{10}$ into $\frac{9}{6}$, the denominators of the fractions being interchanged; this, I ſay, is certain from the operation itſelf; for the ſame numbers are multiplied together in both caſes; but theſe laſt fractions are far from being in their leaſt terms, the former, $\frac{5}{10}$ being reducible to $\frac{1}{2}$, and the latter $\frac{9}{6}$ to $\frac{3}{2}$; but after theſe new fractions $\frac{5}{10}$ and $\frac{9}{6}$ are reduced to their leaſt terms $\frac{1}{2}$ and $\frac{3}{2}$; their product $\frac{3}{4}$ will be the ſame in value with that of the original fractions, and at the ſame time will be in its leaſt terms. Thus then we ſee that, to have the product in its leaſt terms, care muſt be taken, not only to reduce the original fractions as low as poſſible, but after that, to interchange their denominators, and then again to reduce theſe

new fractions to their leaſt terms, and laſtly, to multiply theſe reduced fractions one into another.

The ſame manner of practice will alſo ſerve for diviſion, after it is reduced to the rule of multiplication: as for example; the quotient of $\frac{15}{16}$ divided by $\frac{9}{10}$, is the ſame with the product of $\frac{15}{16}$ multiplied into $\frac{10}{9}$; and this again is the ſame with the product of $\frac{15}{9}$ multiplied into $\frac{10}{16}$, as above; but becauſe the fractions $\frac{15}{9}$ and $\frac{10}{16}$ are not in their loweſt terms, they muſt be reduced to $\frac{5}{3}$ and $\frac{5}{8}$ before it can be expected that their product $\frac{25}{24}$ ſhould be in its leaſt terms. Thus we have reduced the two compendiums of multiplication and diviſion, not only to one rule inſtead of two, as they are commonly given out, but alſo to ſuch a rule as carries its own evidence along with it.

N. B. What was here done by interchanging the denominators, and keeping the numerators in their places, may as well be done by interchanging the numerators, and keeping the denominators in their places, the reaſon of both being the ſame.

Of the rule of proportion in fractions.

15. The rule of proportion in fractions is ſo much the ſame with the rule of proportion in whole numbers, that nothing more needs to be ſaid of it, except to illuſtrate it by an example or two.

Examples of the rule of proportion in fractions.

1*ſt*, *If* $\frac{1}{4}$ *give* $\frac{1}{5}$, *what will* $\frac{1}{6}$ *give?* Here $\frac{1}{5}$ and $\frac{1}{6}$ multiplied together give $\frac{1}{30}$; and this divided by $\frac{1}{4}$, (or multiplied by $\frac{4}{1}$) quotes $\frac{4}{30}$, or $\frac{2}{15}$, which is an anſwer to the queſtion.

2*dly*, *If* $2\frac{2}{3}$ *give* $3\frac{3}{4}$, *what will* $4\frac{4}{5}$ *give?* Theſe mixt numbers, being by the 3d art. reduced to improper fractions, will ſtand thus: *If* $\frac{8}{3}$ *give* $\frac{15}{4}$, *what will* $\frac{24}{5}$ *give?* Here $\frac{15}{4}$ and $\frac{24}{5}$ multiplied together

give $\frac{160}{25}$ or 18; and this divided by $\frac{9}{35}$, quotes $6\frac{3}{4}$, which is an answer to the question.

3*dly*, *If* $\frac{1}{2}$ *of a yard cost* $\frac{1}{3}$ *of a pound, what will* $\frac{1}{4}$ *of an ell cost?* Here it must be observed, that an ell is $\frac{1}{4}$ of a yard, and consequently that $\frac{1}{4}$ of an ell is $\frac{1}{4}$ of $\frac{1}{4}$ or $\frac{1}{16}$ of a yard; so that the question may be stated thus: *If* $\frac{1}{2}$ *of a yard cost* $\frac{1}{3}$ *of a pound, what will* $\frac{1}{16}$ *of a yard cost?* Here $\frac{1}{3}$ and $\frac{1}{16}$ multiplied together make $\frac{1}{48}$, and this divided by $\frac{1}{2}$ quotes $\frac{2}{24}$ of a pound, or 4 shillings and 2 pence; which therefore is an answer to the question.

The reduction of proportion from fractional to integral terms.

Whenever two fractions are proposed, as $\frac{2}{3}$ and $\frac{4}{5}$, whose proportion is desired in whole numbers, reduce the fractions first to the same denomination by the 8th art. that is, in the present case, to $\frac{10}{15}$ and $\frac{12}{15}$; then you will have $\frac{2}{3}$ to $\frac{4}{5}$ as $\frac{10}{15}$ is to $\frac{12}{15}$; but $\frac{10}{15}$ is to $\frac{12}{15}$ as 10 to 12, or as 5 to 6; therefore $\frac{2}{3}$ is to $\frac{4}{5}$ as 5 to 6: here we may observe, that though the finding of the common denominator be necessary for understanding the reason of the rule, yet it is not at all necessary for the practice of it; for to what purpose is it to find the common denominator, to throw it away again when we have done? In practice, therefore, multiply the numerator of the fraction which is the first in the proportion, by the denominator of the second, and then the numerator of the second fraction by the denominator of the first, and the two products will exhibit respectively the proportion of the first fraction to the second in whole numbers, as was evident in the foregoing example.

Of the extraction of roots in fractions.

16. As every fraction is squared, or multiplied into itself, by squaring both the numerator and denominator

nator (ſee art. 11.), ſo *è converſo* the ſquare root of every fraction will be obtained by extracting the ſquare root both of the numerator and denominator: thus the ſquare of $\frac{3}{4}$ is $\frac{9}{16}$, and the ſquare root of $\frac{9}{16}$ is $\frac{3}{4}$. But here care muſt be taken, whenever the ſquare root of a fraction is to be extracted, that the fraction itſelf be firſt reduced to its ſimpleſt terms, by the 7th art. otherwiſe the fraction may admit of a ſquare root, and yet this root may not be diſcovered: thus, if it was required to extract the ſquare root of the fraction $\frac{18}{32}$, it would be impoſſible to obtain the root either of 18 or 32; and yet when this fraction is reduced to its leaſt terms $\frac{9}{16}$, its ſquare root will be found to be $\frac{3}{4}$.

When the ſquare root of a number cannot be extracted exactly, it is uſual to make an approximation by the help of decimals, or otherwiſe, and ſo to approach as near to the value of the true root as occaſion requires. Now in the caſe of a fraction, if the ſquare root of neither the numerator nor denominator can be exactly obtained, there will be no neceſſity however for two approximations, becauſe ſuch a fraction may be eaſily reduced to another of the ſame value, whoſe denominator is a known ſquare: as for inſtance; ſuppoſe the ſquare root of $46\frac{1}{5}$, or $\frac{231}{5}$ was required: I multiply both the numerator and denominator of this fraction by 5, and ſo reduce it to $\frac{1155}{25}$: Here the denominator 25 is a known ſquare number, whoſe root is 5; and the ſquare root of 1155 is 34 nearly; therefore, the ſquare root of the fraction propoſed is nearly $\frac{34}{5}$, or $6\frac{4}{5}$. But, after all, the beſt way of extracting the ſquare root of a vulgar fraction, is by throwing it into a decimal fraction, as will be ſhewn hereafter.

Note, That whatever has here been ſaid concerning the extraction of the ſquare root in fractions may

eaſily be applied, *mutatis mutandis*, to the extraction of the cube root, &c.

Of decimal fractions.

And firſt of their notation.

17. A decimal fraction is a fraction whoſe denominator is 10, or 100, or 1000, or 10000, &c. and this denominator is never expreſſed, but always underſtood by the place of the figure it belongs to: for as all figures on the left hand of the place of units riſe in their value, according to their diſtances from it, in a decuple proportion; ſo all figures on the right hand of the place of units ſink in their value in a ſubdecuple proportion; as for inſtance; the number 345.6789, where 5 ſtands in the place of units, is to be read thus; *three hundred forty five, ſix tenths, ſeven hundredth parts, eight thouſandth parts, nine ten-thouſandth parts:* or the decimal parts may be read thus; *ſix thouſand ſeven hundred eighty nine ten-thouſandth parts*; the denominator being ten thouſand, becauſe the laſt figure 9, according to the former way of reckoning, ſtands in the place of ten-thouſandth parts. The reaſon of this latter way of reading is plain; for $\frac{6}{10}$ are $\frac{6000}{10000}$, and $\frac{7}{100}$ are $\frac{700}{10000}$, and $\frac{8}{1000}$ are $\frac{80}{10000}$, and $\frac{6000}{10000}$, $\frac{700}{10000}$, $\frac{80}{10000}$, and $\frac{9}{10000}$, all added together, make $\frac{6789}{10000}$.

Cyphers are uſed in the expreſſion of decimals as well as whole numbers, and for the ſame reaſon. Thus .067 may be read either *no tenths, ſix hundredth parts, ſeven thouſandth parts*; or *ſixty ſeven-thouſandth parts*. But cyphers on the right hand of a decimal number (if nothing follows them) are as inſignificant as cyphers on the left hand of a whole number; and yet cyphers are ſometimes placed after decimals, for the

the ſake of regularity, or when we want to increaſe the number of decimal places.

From what has here been ſaid, it will be eaſy to multiply or divide any number by 10, 100, 1000, *&c.* only by removing the ſeparating point towards the right or left hand. Thus the number 345.6789 being multiplied by 10, becomes 3456.789; and being multiplied by 100, becomes 34567.89: and the ſame number 345.6789 being divided by 10, becomes 34.56789; and being divided by 100, becomes 3.456789: thus again, the number 345 being divided by 10000, becomes .0345; for to divide by 10000, is the ſame thing as to remove the ſeparating point 4 degrees towards the left hand, if there be any ſeparating point in the number given; but if there be none, as in the preſent caſe, then to put a ſeparating point four degrees towards the left hand, which in this example cannot be done, but by the help of a cypher in the firſt decimal place.

Of the addition and ſubtraction of decimal fractions.

18. The chief advantage of decimal arithmetic above that of common fractions, conſiſts in this, that in decimals all operations are performed as in whole numbers: this will preſently appear from the ſeveral parts of decimal arithmetic, as they come now to be treated of in order; and firſt of addition and ſubtraction.

Addition and ſubtraction in decimals are performed after the ſame manner as in whole numbers, care being taken, that like parts be placed under one another: as for example, .567 are added to .89 thus;

.89	.89	.890
.567, ſubtracted thus;	.567; or thus;	.567,
1.457;	.323;	.323.

Of

Of the multiplication of decimal fractions.

19. Multiplication of decimals is alſo performed as in whole numbers, no regard being had to the decimals as ſuch, till the product is obtained; but then, ſo many decimal places muſt be cut off from the right hand of the product, as are contained both in the multiplicator and multiplicand: as for inſtance; let it be required to multiply 4.56 by 2.3: here, conſidering both factors as whole numbers, I multiply 456 by 23, and find the product to be 10488; but then, conſidering that there was one decimal in the multiplicator, and two in the multiplicand, I cut off three decimal places from the right hand of the product, and the true product ſtands thus; 10.488.

To ſhew the reaſon of this operation, let the two factors be reduced to ſimple fractions according to the common way, and we ſhall have 2.3 equal to $\frac{23}{10}$, and 4.56 equal to $\frac{456}{100}$, and theſe two fractions multiplied together make $\frac{10488}{1000}$; divide by 10000, which is done by cutting off the three laſt figures, according to art. the 17th, and the quotient will be 10.488. Another example may be this: let it be required to multiply 45600 by .23: the product of 45600 multiplied by 23 is 1048800: but as there were two decimals in the given multiplicator, and none in the multiplicand; I cut off two decimal places from the laſt product, and the true product will be found to be 10488,00, or 10488. Laſtly, let it be required to multiply .000456 by .23: here, neglecting the initial cyphers in the multiplicand, I multiply 456 by 23, and the product is 10488: then I conſider, that there were two decimal places in the multiplicator, and ſix in the multiplicand, and conſequently that eight decimal places are to be cut off from the laſt product; but the laſt product

conſiſts

consists of only 5 places; therefore I place three cyphers to the left hand, with the separating point before them, and so make the true product .00010488.

There are various compendiums of this sort of multiplication to be met with in *Oughtred* and others; but they are such as, by a little exercise, any one tolerably well grounded in this part of Arithmetic will easily discover of himself as they lie in his way.

Of the division of decimal fractions.

20. Division in decimal fractions is performed, first by considering them as whole numbers, and dividing accordingly; and then cutting off from the right hand of the quotient, as many decimal places as the dividend hath more than the divisor. The reason whereof is manifest from the 19th article: for since the divisor and quotient multiplied together are to make the dividend, the divisor and quotient ought to have as many decimal places between them, as there are in the dividend; therefore the quotient alone ought to have as many decimal places as the dividend hath more than the divisor.

Example the *1st*; Let it be proposed to divide 10.488 by 2.3: here dividing the whole number 10488 by the whole number 23, I find the quotient to be 456: but then considering that there were 3 decimal places in the dividend, and but one in the divisor, I cut off two places from the right hand of the quotient, and so make the true quotient 4.56.

Example *2d*; Let it be proposed to divide 5678.9 by .06: here, because there are two decimal places in the divisor, and but one in the dividend, I supply the deficient place by putting a cypher after the dividend, thus, 5678.90; then dividing the whole number 567890 by the whole number 6 (for since 6 is now considered as a whole number, the cypher before it may be neglected), I find the quotient to be 94648, which is not to be sunk, because the dividend

vidend was made to have as many decimal places as the diviſor; but as this quotient is not exact, if for a greater degree of exactneſs I would continue it to any number of decimal places, ſuppoſe 2, inſtead of one cypher after the diviſor, I would have put three, and then the quotient would have come out 94648.33, and this quotient is much more exact than the former, as lying between 94648.33 and 94648.34: but it ought further to be obſerved concerning this quotient, that if the diviſion was to be continued *in infinitum*, the figures in the decimal places would be all 3's: this is evident from the work; for the two laſt dividuals are the ſame, and therefore they muſt all be the ſame.

To reduce a vulgar fraction to a decimal fraction.

21. Since every fraction may be conſidered as the quotient of the numerator divided by the denominator (ſee art. 13th,) we have an eaſy rule for reducing a vulgar fraction to a decimal fraction, which is as follows: put as many cyphers after the numerator as are equal in number to the number of decimal places whereof you intend your reduced fraction to conſiſt, and call theſe cyphers decimal; and then dividing the numerator by the denominator, the quotient will be a decimal number equal to the fraction firſt propoſed, or perhaps a mixt number, if the fraction propoſed was an improper one.

Example 1*ſt*; Let this fraction $\frac{3}{4\,9}$ be propoſed to be reduced to a decimal one conſiſting of four decimal places; here putting 4 decimal cyphers after the numerator 3, I divide 3.0000 by 49, and the quotient uncorrected is 612: but now conſidering that there were 4 decimal places in the dividend, and none in the diviſor, and conſequently that four decimal places are to be cut off from the quotient, whereas it conſiſts but of three; I ſupply this defect of places by a cypher at the left hand, and ſo make the quotient .0612.

Example

Example 2*d*; Let this fraction $\frac{7}{16}$ be propoſed to be reduced to a decimal fraction, conſiſting, if poſſible, of ſix places: here dividing 7.000000 by 16, I find the true quotient to be .4375, the two laſt cyphers in the dividend being uſeleſs.

Note. When this diviſion runs *ad infinitum*, it will be impoſſible for the reduction to be exact in a finite number of terms; but an approximation may be made, that ſhall come nearer to the quotient than the leaſt aſſignable difference, by taking more and more terms.

To reduce the decimal parts of any integer to ſuch other parts as that integer is uſually divided into.

22. To explain this rule, and to give an example of it at the ſame time; let .345 of a pound ſterling, that is, three hundred forty five thouſandth parts of a pound, be given to be reduced into ſhillings pence and farthings: here then I obſerve, that as any number of pounds, multiplied by 20, will give as many ſhillings as are equal to the pounds, ſo any decimal parts of a pound, multiplied by 20, will give as many ſhillings, and decimal parts of a ſhilling, as are equivalent to the decimal parts of a pound; and ſo on as to pence and farthings: multiplying therefore .345 by 20, the product is 6 and .900, or 6.9, which ſignifies, that .345 of a pound are equivalent to ſix ſhillings and nine tenths of a ſhilling, which is uſually written thus; 6.9 ſhillings: again, multiplying this laſt decimal .9 by 12 for pence, I find that .9 of a ſhilling are equivalent to 10.8 pence: laſtly, multiplying .8 by 4 for farthings, I find that .8 of a penny are equivalent to 3.2 farthings; as for the .2 of a farthing, I neglect it, there being no lower denomination, or at leaſt not intending to deſcend any lower; and ſo I find .345 of a pound to amount to ſix ſhillings and ten pence three farthings.

To

To reduce the common parts of any integer into equivalent decimal parts of the ſame.

23. This reduction being the reverſe of the former, it might be performed by diviſion, as that was by multiplication; but, when all things are conſidered, I do not know whether the following method may not be thought as eaſy and as intelligible as any: let it then be required to reduce 2 hours 34 minutes 56 ſeconds into equivalent decimal parts of a day. Now in one day there are 86400 ſeconds; and in two hours 34 minutes 56 ſeconds there are 9296 ſeconds; therefore two hours 34 minutes 56 ſeconds are equivalent to $\frac{9296}{86400}$ of one day: reduce this vulgar fraction to an equivalent decimal, by the laſt article but one, and you will find it to be .10759; therefore 2 hours 34 minutes 56 ſeconds are equivalent to .10759 of one day. But there is one article ſtill remains to be adjuſted, and that is, to how many decimal places the foregoing fraction muſt be reduced, ſo as to expreſs accurately enough the parts of a day to a ſecond of time. Now to know this, I conſider that one ſecond of time is $\frac{1}{86400}$ of one day; therefore I reduce $\frac{1}{86400}$ to a decimal fraction, at leaſt as far as to the firſt ſignificant figure, and find it to be .00001; whence I conclude, that to expreſs the parts of a day to a ſecond of time by any decimal, that decimal muſt not conſiſt of fewer than 5 places, becauſe there were 5 places in the decimal fraction .00001. Now to ſhew that the decimal fraction above found, to wit, .10759 expreſſes the time propoſed to a ſecond, reduce it back again, by the laſt art. and you will find it amount to 2 hours 34 minutes 55.8 ſeconds.

For another example, let us take the reverſe of that in the laſt art. that is, let it be propoſed to re-

duce 6 ſhillings 10 pence 3 .2 farthings into equivalent decimal parts of a pound: one pound contains 960 farthings, or 9600 tenths of a farthing; and 6 ſhillings 10 pence 3 .2 farthings contain 3312 tenths of a farthing; therefore 6 ſhillings 10 pence 3.2 farthings are equivalent to $\frac{3312}{9600}$ of a pound; but $\frac{1}{9600}$ being reduced to a decimal, is, .0001 *&c.* wherein the firſt ſignificant figure is in the 4th place; therefore I reduce the fraction $\frac{3312}{9600}$, to four decimal places, and they amount to .3450, that is, .345 of a pound; ſo that in this particular caſe three decimal places are ſufficient to expreſs exactly the ſum propoſed.

Of the extraction of the ſquare root in decimal fractions.

24. Having treated of the multiplication and diviſion of decimal fractions, it would be altogether needleſs to ſay any thing concerning the rule of proportion, which is but a particular application of both: therefore I ſhall now paſs on to the extraction of the ſquare root, at leaſt ſo far as it concerns decimal fractions. There are but few ſquare numbers, or ſuch as will admit of an exact ſquare root, in compariſon of the reſt; and therefore, whenever a number is propoſed to have its ſquare root extracted, the artiſt muſt firſt determine with himſelf, to how many decimal places it is proper the root ſhould be continued; and then, by annexing decimal cyphers, if need be, to the right hand of the number propoſed, he muſt make twice as many decimal places there as the root is to conſiſt of; after this, he muſt put a point over the place of units, and then, paſſing by every other figure, he muſt point in like manner all the reſt, both to the right hand, and to the left: by this

means

means the number will be prepared, and the ſquar root may be extracted as in whole numbers, provide that ſo many decimal places be cut off from the roo when obtained, as were firſt deſigned.

Example 1*ſt*; Let the root of 2345.6 be required to two decimal places. The number, when prepared, ſtands thus, 2345.6000, or as a whole number, thus, 23456000; and its ſquare root, when extracted, will be 4843 nearly; and therefore 48.43 will be the root ſought. To try this root 48.43, multiply it into itſelf, and the four firſt figures of the ſquare will be 2345, which are all true; nor can it be expected any more ſhould be ſo, becauſe there were but four places true in the root, no notice being taken of the reſt; but had the root been extracted true to 5 places, that is, to as many places as the original ſquare conſiſted of, it would then have been 48.431; multiply this number into itſelf, and 5 of the firſt figures of the product, taken with the leaſt error, will be 2345.6, which is the original ſquare itſelf.

Example 2*d*; Let the root of .0023456 be required to 5 decimal places. Here putting a cypher in the place of units to direct the punctuation, thus, 0 .0023456000, I extract the ſquare root of 23456000 as of a whole number, and find it to be 4843, as above: but, conſidering that this root is to be ſunk 5 places, I put a cypher to the left hand, and ſo make the true root .04843.

That the ſuppoſed ſquare ought to have twice as many decimal places as the root, is evident, both *à priori*, and *à poſteriori*: *à priori*, becauſe in extracting the ſquare root, two figures are brought down from the ſquare for every ſingle figure gained in the root; and *à poſteriori*, becauſe the root multiplied into itſelf is to produce the ſquare; and therefore, from the nature of multiplication, the ſquare ought to have twice as many decimal places as the root.

THE

THE ELEMENTS OF ALGEBRA.

BOOK I.

The Definition of Algebra.

Art. 1. I SHALL not here detain the young ſtudent with a long hiſtorical account of the riſe and progreſs of Algebra; nor even ſo much as with either the etymology or ſignification of the word; which would contribute but very little to his information, till he has made a further progreſs in the ſcience itſelf, and whereof he will find enough in Dr. *Wallis* and others. Nor, indeed is it a ſubject altogether ſo proper at this time to be inſiſted upon; this art, like many others, having now conſiderably outgrown its name, and being often employed in arithmetical operations very different from what its name imports. All I ſhall advance then, by way of definition, is, that *Algebra*, in the modern ſenſe of the word, *is the art of computing by ſymbols*, that is, generally ſpeaking, by letters of the alphabet; which, for the ſimplicity and diſtinctneſs both of their ſounds and characters, are much more commodious for this purpoſe than any other ſymbols or marks whatever.

In this way of notation, it is uſual to ſubſtitute letters not only for ſuch quantities as are unknown, and conſequently ſuch as cannot well be repreſented otherwiſe, but alſo for known quantities themſelves, in order to keep them diſtinct one from another, and to form general concluſions. As for inſtance; ſuppoſe it was demanded of me, what two numbers are thoſe, whoſe ſum is 48, and whoſe difference is 14: here, if I only put x, or ſome other letter, for one of the unknown quantities, and uſe the known ones 48 and 14 as I find them in the problem, I ſhall only come to this particular concluſion, to wit, that the greater number is 31, and the leſſer 17, which numbers will anſwer both the conditions of the problem. But if, inſtead of the known numbers 48 and 14, I ſubſtitute the general quantities a and b reſpectively, and ſo propoſe the problem thus; *What two numbers are thoſe, whoſe ſum is* a, *and whoſe difference is* b? I ſhall then come to this general concluſion, *viz.* that *Half the ſum of* a *and* b *will be the greater number, and half their difference will be the leſs:* which general theorem will ſuit not only the particular caſe abovementioned, but alſo all other caſes of this problem that can poſſibly be propoſed. How I come by theſe two concluſions, will be ſufficiently ſhewn in the courſe of this work; as alſo many other advantages attending this way of ſubſtituting letters for known quantities, beſides thoſe already mentioned.

What I have here ſaid, was only to illuſtrate in ſome meaſure the definition already given of Algebra, and to ſhew, that letters are there uſed, not ſo much to ſignify particular quantities as ſuch, as to ſignify the relation they have to one another in any problem or computation. From all which it may be obſerved, that letters repreſent quantities in Algebra juſt in the ſame manner as they do perſons in common life, when two or more perſons are diſtinctly to be conſidered, with regard to any compact, law-ſuit, or in any other relation whatever.

N. B.

N. B. A ſingle quantity is ſometimes repreſented by two or more letters, when it is conſidered as the product of the quantities ſignified by thoſe letters ſingly: thus *ab* is the product of the multiplication of *a* and *b*; and *abc* is the product ariſing from the continual multiplication of *a*, *b*, and *c*. But of this more particularly under the head of multiplication.

Of affirmative and negative quantities in algebra.

2. Algebraic quantities are of two ſorts, affirmative and negative: an affirmative quantity is a quantity greater than nothing, and is known by this ſign +: a negative quantity is a quantity leſs than nothing, and is known by this ſign —: thus + *a* ſignifies that the quantity *a* is affirmative, and is to be read thus, *plus a*, or more *a*: — *b* ſignifies that the quantity *b* is negative, and muſt be read thus, *minus b*, or leſs *b*.

The poſſibility of any quantity's being leſs than nothing is to ſome a very great paradox, if not a downright abſurdity; and truly ſo it would be, if we ſhould ſuppoſe it poſſible for a body or ſubſtance to be leſs than nothing. But quantities, whereby the different degrees of qualities are eſtimated, may be eaſily conceived to paſs from affirmation through nothing into negation. Thus a perſon in his fortunes may be ſaid to be worth 2000 pounds, or 1000, or nothing, or — 1000, or — 2000; in which two laſt caſes he is ſaid to be 1000 or 2000 pounds worſe than nothing: thus a body may be ſaid to have 2 degrees of heat, or one degree, or no degree, or — one degree, or — two degrees: thus a body may be ſaid to have two degrees of motion downwards, or one degree, or no degree, or — one degree, or — two degrees, *&c.* Certain it is, that all contrary quantities do neceſſarily admit of an intermediate ſtate, which alike partakes of both extremes, and is beſt repreſented by a cypher or 0: and if it is proper to

ſay, that the degrees on either ſide this common limit are greater than nothing; I do not ſee why it ſhould not be as proper to ſay of the other ſide, that the degrees are leſs than nothing; at leaſt in compariſon to the former. That which moſt perplexes narrow minds, in this way of thinking, is, that in common life, moſt quantities loſe their names when they ceaſe to be affirmative, and acquire new ones ſo ſoon as they begin to be negative: thus we call negative goods, debts; negative gain, loſs; negative heat, cold; negative deſcent, aſcent, &c. and in this ſenſe indeed, it may not be ſo eaſy to conceive, how a quantity can be leſs than nothing, that is, how a quantity under any particular denomination can be ſaid to be leſs than nothing, ſo long as it retains that denomination. But the queſtion is, whether, of two contrary quantities under two different names, one quantity under one name may not be ſaid to be leſs than nothing, when compared with the other quantity, though under a different name; whether any degree of cold may not be ſaid to be further from any degree of heat, than is lukewarmth, or no heat at all. Difficulties that ariſe from the impoſition of ſcanty and limited names, upon quantities which in themſelves are actually unlimited, ought to be charged upon thoſe names, and not upon the things themſelves, as I have formerly obſerved upon another occaſion; ſee introduction, art. 11. In Algebra, where quantities are abſtractedly conſidered, without any regard to degrees of magnitude, the names of quantities are as extenſive as the quantities themſelves; ſo that all quantities that differ only in degree one from another, how contrary ſoever they may be one to another, paſs under the ſame name; and affirmative and negative quantities are only diſtinguiſhed by their ſigns, as was obſerved before, and not by their names; the ſame letter repreſenting both: theſe ſigns therefore in algebra carry the ſame diſtinction along with them as do particles and adjectives ſometimes in com-

mon language, as in the words convenient and inconvenient, happy and unhappy, good health and bad health, *&c.*

These affirmative and negative quantities, as they are contrary to one another in their own natures, so likewise are they in their effects; a consideration which, if duly attended to, would remove all difficulties concerning the signs of quantities arising from addition, subtraction, multiplication, division, *&c:* for the result of working by affirmative quantities in all these operations is known; and therefore, like operations in negative quantities, may be known by the rule of contraries.

Before we proceed any further, it may not be amiss to advertise, that if a quantity has no sign before it, it must always be taken to be affirmative; and that if it has no numeral coefficient before it, unity must always be understood: thus 2 *a* signifies $+2a$, and *a* signifies 1 *a* or $+1a$.

By the numeral coefficient of a quantity, I mean, the number or fraction by which that quantity is multiplied: thus 2 *a* signifies twice *a*, or *a* taken twice, and the coefficient is 2: $\frac{3}{4}a$, or $\frac{3a}{4}$ signifies $\frac{3}{4}$ of the quantity *a*, and the coefficient is $\frac{3}{4}$.

N. B. The sign of a negative quantity is never omitted; nor the sign of an affirmative, except when such an affirmative is considered by itself, or happens to be the first in a series of quantities succeeding one another: thus we do not often mention the quantity $+a$, but the quantity *a*; nor the series $+a-b-c+d$, but the series $a-b-c+d$. We shall now consider the several operations of algebraic quantities.

Of the addition of algebraic quantities.

3. This article I shall divide into several paragraphs: as,

1ſt, Whenever two or more quantities of the ſame denomination, and which have the ſame ſign before them, are to be added together, put down the ſum of their numeral coefficients with the common ſign before it, and the common denominator after it: thus $+2a$ and $+3a$ added together make $+5a$, for the ſame reaſon as 2 dozen and 3 dozen added together make 5 dozen: thus again, $-3ab$, $+4ab$, and $-5ab$, when added together, make $-12ab$, for the ſame reaſon as ſeveral debts added together make a greater debt.

2d, If two quantities of the ſame denomination which have different ſigns before them are to be added together, put down only the difference of their numeral coefficients, with the common denominator after it, and the ſign of the greater before it: for in this caſe, the quantities to be added are contrary one to another, the leſs quantity on whatever ſide ſoever it lies, will always deſtroy ſo much of the other as is equal to itſelf. Thus $+5a$ added to $-2a$ makes $+3a$; as if a perſon owes me 200 pounds upon one account, to whom I owe 200 upon another, the balance upon the whole will be 200 pounds on my ſide. If it be objected, that this is ſubtraction, and not addition; I anſwer, that the addition of $-2a$ will at any time have the ſame effect as the ſubtraction of $+2a$: but I deny that the addition of $-2a$ is the ſame, or will have the ſame effect as the ſubtraction of $-2a$. Other examples of this caſe may be theſe; $+7a$ added to $-7a$ gives 0; $+3a$ added to $-12a$ gives $-9a$; $+a$ added to $-5a$ gives $-4a$; $+5a$ added to $-a$ gives $+4a$; $+\frac{1}{2}a$ added to $-\frac{1}{4}a$ gives $+\frac{1}{4}a$, &c.

When many quantities of the ſame denomination are to be added together, whereof ſome are affirmative and ſome negative, reduce them firſt to two, by adding all the affirmative quantities together, and all the negative ones, and then to one by the laſt paragraph. Thus $+10a-9a+8a-7a$, when added together,

together, make $2a$; for $+10a$ and $+8a$ make $+18a$, $-9a$ and $-7a$ make $-16a$, and $+18a$ and $-16a$ make $+2a$.

4*th*, Quantities of different denominations will not incorporate, and therefore cannot otherwiſe be added together, than by placing them in any order one after another, with their proper ſigns before them, except the firſt, whoſe ſign, if affirmative, may be omitted. Thus $+2a$ and $-3b$ and $+4c$ and $-5d$, when added together, make $2a-3b+4c-5d$: thus a and b added together make $a+b$; and hence it is, that whenever two quantities are found with this ſign $+$ betwixt them, it ſignifies the ſum ariſing from the addition of thoſe two quantities together: thus if a ſtands for 7, and b ſtands for 3, $a+b$ will ſtand for 10, and ſo of the reſt: but if $-b$ is to be added to a, the ſum muſt be written down thus, $a-b$; for to add $-b$, is the ſame as to ſubtract $+b$.

5*th*, Compound quantities, whoſe members are all of different denominations, are likewiſe incapable of being added any other way, than by being placed one after another without altering their ſigns: thus $3a+4b$ added to $5c-6d$ can only make $3a+4b+5c-6d$. But if the members are not all of different denominations, it may then be convenient to place one compound quantity under another, with like parts under like, as far as it can be done, as in the following examples;

$$\begin{array}{l} a+b \\ a-b \\ \hline 2a \quad *+ \end{array}$$

† For a and a added together make $2a$; and $+b$ and $-b$ added together deſtroy one another, and ſo make 0 or *; which character in Algebra is always uſed to ſignify a vacant place.

$$\begin{array}{l} 2x-3a+4b-5c+6d-7e \quad * \\ 10x+9a-8b-7c-6d \quad *-5f \\ \hline 12x+6a-4b-12c \quad *-7e-5f. \end{array}$$

Note, That in the addition, ſubtraction, and multiplication of compound algebraic quantities, it matters little which way the work is carried on, whether from right or left, or from left to right, becauſe here are no reſerves made for higher places.

Of the ſubtraction of algebraic quantities.

4. Whenever a ſingle algebraic quantity is to be ſubtracted from another quantity, whether ſimple or compound, firſt change the ſign of the quantity to be ſubtracted, that is, if it be affirmative, make it, or at leaſt call it, negative, and *vice verſa*, and then add it ſo changed to the other: for ſince (as was before hinted) the ſubtracting of any one quantity from another, is the ſame in effect as adding the contrary; and ſince changing the ſign of the quantity to be ſubtracted, renders that quantity juſt contrary to what it was before, it is evident, that after ſuch a change it may be added to the other, and that the reſult of this addition will be the ſame with that of the intended ſubtraction. Thus may the rule of ſubtraction, by changing the ſign of the quantity to be ſubtracted, be at any time changed into that of addition, juſt as the rule of diviſion in fractions, by inverting the terms of the diviſor, was changed into that of multiplication. As for example, $+b$ ſubtracted from a leaves $a-b$, becauſe $-b$ added to a makes $a-b$; ſo that $a-b$ may be conſidered either as the ſum of a and $-b$ added together, or as the remainder of $+b$ ſubtracted from a, or as the difference between a and b, or as the exceſs of a above b, all which amount to the ſame thing: as if a ſignifies 7, and b 3, $a-b$ muſt ſtand for 4, and ſo of the reſt.

The rule of ſubtraction here given is univerſal, though there will not be always occaſion to have recourſe to it: for ſuppoſe $3a$ is to be ſubtracted from $7a$, every one's common ſenſe will inform him, that there

there muſt remain 4*a*, juſt as threeſcore ſubtracted from ſevenſcore leaves fourſcore.

Other examples of algebraic ſubtraction may be theſe that follow.

1*ſt*, 7*a* ſubtracted from 5*a* leaves —2*a*, becauſe —7*a* added to +5*a* makes —2*a*, by the 2d paragraph of the laſt article.

2*d*, 9*a* ſubtracted from 0 leaves —9*a*, becauſe —9*a* added to 0 makes —9*a*.

3*d*, 12*a* ſubtracted from —3*a* leaves —15*a*, becauſe —12*a* added to —3*a* makes —15*a*, by the firſt paragraph of the laſt article.

4*th*, —3*a* ſubtracted from —8*a* leaves —5*a*, becauſe +3*a* added to —8*a* makes —5*a*.

5*th*, +7*a* ſubtracted from —3*a* leaves +4*a*, becauſe +7*a* added to —3*a* makes +4*a*.

6*th*, —6*a* ſubtracted from 0 leaves +6*a*, becauſe +6*a* added to 0 makes +6*a*.

7*th*, —5*a* ſubtracted from +5*a* leaves +10*a*, becauſe +5*a* added to +5*a* makes +10*a*.

8*th*, —*b* ſubtracted from *a* leaves *a*+*b*, becauſe +*b* added to *a* makes *a*+*b*, by the 4th paragraph of the laſt article.

9*th*, —2 ſubtracted from 7 leaves 9, becauſe +2 added to 7 makes 9.

From the firſt of theſe examples it appears, that a greater quantity may be taken out of a leſs, but then the remainder will be negative; juſt as a gameſter that has but 5 guineas about him may loſe 7, but then there will remain a debt of 2 guineas upon him. By the laſt example it appears, that —2 ſubtracted from 7 leaves 9, that is, that if a negative quantity be ſubtracted from an affirmative one, the affirmative quantity will be ſo far from being diminiſhed thereby, that it will be increaſed; a principle which I fear will be found ſomewhat hard of digeſtion, eſpecially by weak conſtitutions: therefore,

therefore, to ſtrengthen my patient as far as lies in my power, I ſhall ſuggeſt to him the following conſiderations:

1*ſt*, In any ſubtraction, if the remainder and the leſs number added together make the greater, the ſubtraction is juſt: but in our caſe, the remainder 9 added to the leſs number -2 makes the greater number 7; therefore -2 ſubtracted from 7 leaves 9.

2*dly*, In all ſubtraction whatever, the remainder is the difference betwixt the greater number and the leſs; but the difference between $+7$ and -2 is 9; therefore -2 ſubtracted from $+7$ leaves 9.

3*dly*, 7 is equal to $\overline{9-2}$ by the ſecond paragraph of the laſt article; therefore -2 ſubtracted from 7 will have the ſame remainder as -2 ſubtracted from $\overline{9-2}$: but -2 ſubtracted from $\overline{9-2}$ leaves 9; therefore -2 ſubtracted from 7 leaves 9. In ſhort, the taking away a defect, in any caſe whatever, will amount to the ſame as adding ſomething real: as if an eſtate be incumbered with a mortgage or a rent-charge upon it, whoever takes off the incumbrance juſt ſo much encreaſes the value of the eſtate.

4*thly*, The leſs there is taken from 7, the more will be left: if nothing be taken, there will remain 7; therefore if leſs than nothing be taken, there ought to remain more than 7.

5*thly*, If, after all that has been ſaid, or perhaps all that can be ſaid in this abſtracted way, ſome ſcruples ſtill remain, let us apply the principle we have already advanced, and try whether we ſhall meet with any better ſucceſs that way. Let it then be required to ſubtract the compound quantity $a-2$ from the compound quantity $6a+7$: in order to this, I place a under $6a$, and -2 under 7, and then ſubtract as follows; a from $6a$ and there remains $5a$, -2 from 7 and (if our aſſertion be true) there remains 9; therefore the whole remainder is

$5a+9$.

$5a+9$. Now I dare appeal to every one's common ſenſe, whether this ſubtraction be not juſt: for certain it is, that if a be ſubtracted from $6a+7$, the remainder will be $5a+7$; and if ſo, then it is as certain, that if $a-2$ be ſubtracted, which is leſs than the former by 2, the remainder will be greater by 2, that is, $5a+9$. But to proceed:

Other examples of the ſubtraction of compound algebraic quantities may be theſe.

$a+b$	‡Thus $7-3$, or 4, ſubtracted from 7	$*+12$
$a-b$	$+3$, or 10, leaves twice 3, or 6.	$3a+7$
$*+2b$‡		$-3a+5$.

From	$12x+6a-4b-12c$	$*-7e-5f$
Take	$2x-3a+4b-5c+6d-7e-*$	
Remains	$10x+9a-8b-7c-6d$	$*-5f$
Proof	$12x+6a-4b-12c$	$*-7e-5f$.

If never a member of the ſubtrahend be found to be of the ſame denomination with any member of the number from whence the ſubtraction is to be made, change the ſign of every member of the ſubtrahend, and then add it to the other. As if $5c-6d$ is to be ſubtracted from $3a-4b$, firſt change the ſign of $5c-6d$, and make it $-5c+6d$, and then add it to the other, and you will have $3a-4b-5c+6d$ for the remainder.

Of the multiplication of algebraic quantities.

And firſt, how to find the ſign of the product in multiplication, from thoſe of the multiplicator and multiplicand given.

5. Before we can proceed to the multiplication of algebraic quantities, we are to take notice, that if

if the ſigns of the multiplicator and multiplicand be both alike, that is, both affirmative, or both negative, the product will be affirmative, otherwiſe it will be negative: thus + 4 multiplied into + 3, or — 4 into — 3, produces in either caſe + 12: but — 4 multiplied into + 3, or + 4 into — 3 produces in either caſe — 12.

If the reader expects a demonſtration of this rule, he muſt firſt be advertiſed of two things: *firſt*, that numbers are ſaid to be in arithmetical progreſſion when they increaſe or decreaſe with equal differences, as 0, 2, 4, 6; or 6, 4, 2, 0; alſo as 3, 0, — 3; 4, 0, — 4; 12, 0, — 12; or — 12, 0, + 12: whence it follows, that three terms are the feweſt that can form an arithmetical progreſſion; and that of theſe, if the two firſt terms be known, the third will eaſily be had: thus, if the two firſt terms be 4 and 2, the next will be 0: if the two firſt be 12 and 0, the next will be — 12; if the two firſt be — 12 and 0, the next will be + 12, *&c.*

2*dly*, If a ſet of numbers in arithmetical progreſſion, as 3, 2, and 1, be ſucceſſively multiplied into one common multiplicator, as 4, or if a ſingle number, as 4, be ſucceſſively multiplied into a ſet of numbers in arithmetical progreſſion, as 3, 2, and 1, the products 12, 8, and 4, in either caſe, will be in arithmetical progreſſion.

This being allowed (which is in a manner ſelf-evident), the rule to be demonſtrated reſolves itſelf into four caſes:

1*ſt*, That + 4 multiplied into + 3 produces + 12.

2*dly*, That — 4 multiplied into + 3 produces — 12.

3*dly*, That + 4 multiplied into — 3 produces — 12.

And *laſtly*, that — 4 multiplied into — 3 produces + 12. Theſe caſes are generally expreſſed in ſhort thus: firſt + into + gives +; ſecondly — into + gives

gives —; thirdly + into — gives —; fourthly — into — gives +.

Case 1st, That + 4 multiplied into + 3 produces + 12, is self-evident, and needs no demonstration; or, if it wanted one, it might receive it from the first paragraph of the third article; for to multiply + 4 by + 3 is the same thing as to add 4 + 4 + 4 into one sum; but 4 + 4 + 4 added into one sum give + 12, therefore + 4 multiplied into + 3 gives + 12.

Case 2d. And from the second paragraph of the 3d art. it might in like manner be demonstrated, that — 4 multiplied into + 3 produces — 12: but I shall here demonstrate in another way, thus: multiply the terms of this arithmetical progression 4, 0, — 4, into + 3, and the products will be in arithmetical progression, as above; but the two first products are 12 and 0; therefore the third will be — 12; therefore — 4 multiplied into + 3 produces — 12.

Case 3d. To prove that + 4 multiplied into — 3 produces — 12; multiply + 4 into + 3, 0, and — 3 successively, and the products will be in arithmetical progression; but the two first products are 12 and 0, therefore the third will be — 12; therefore + 4 multiplied into — 3 produces — 12.

Case 4th. Lastly, to demonstrate, that — 4 multiplied into — 3 produces + 12, multiply — 4 into 3, 0, and — 3 successively, and the products will be in arithmetical progression; but the two first products are — 12 and 0, by the second case; therefore the third product will be + 12; therefore — 4 multiplied into — 3 produces + 12.

Cas. 2d, + 4, 0, — 4
+ 3, + 3, + 3
+ 12, 0, — 12.

Cas. 3d, + 4, + 4, + 4
+ 3, 0, — 3
+ 12, 0, — 12.

Cas. 4th, — 4, — 4, — 4
+ 3, 0, — 3
— 12 0, + 12.

These

These 4 cases may be also more briefly demonstrated thus: + 4 multiplied into + 3 produces + 12; therefore — 4 into + 3, or + 4 into — 3 ought to produce something contrary to + 12, that is, — 12: but if — 4 multiplied into + 3, produces — 12, then — 4 multiplied into — 3 ought to produce something contrary to — 12, that is, + 12; so that this last case, so very formidable to young beginners, appears at last to amount to no more than a common principle in Grammar, to wit, that two negatives make an affirmative; which is undoubtedly true in Grammar, though perhaps it may not always be observed in languages.

Of the multiplication of simple algebraic quantities.

6. These things premised, the multiplication of simple algebraic quantities is performed, first by multiplying the numeral co-efficients together, and then putting down, after the product, all the letters in both factors, the sign (when occasion requires) being prefixed as above directed. Thus $4b$ multiplied into $3a$ produces $12ab$.

Though this kind of language (for it is no more) like all others, be purely arbitrary, yet that a more rational one could not have been invented for this purpose, will appear by the following consideration. If any quantity, as b, is to be multiplied by any number, as 2, 3, or 4, the product cannot be better represented than by $2b$, $3b$, $4b$, &c; therefore if b is to be multiplied by a, the product ought to be called ab: but if b multiplied into a produces ab, then $4b$ multiplied into a ought to produce 4 times as much, that is, $4ab$, lastly, if $4b$ multiplied into a produces $4ab$, then $4b$ multiplied into $3a$ ought to produce 3 times as much, that is, $12ab$.

Hence it is, that whenever in Algebra two or more letters are found together, as they stand in a word, without any thing between them, they signify the pro-

duct ariſing from a continual application of the quantities repreſented by them: thus *ab* ſignifies the product of *a* and *b* multiplied together; and *abc* ſignifies the product of the quantity *ab* multiplied into *c*: thus *aa* ſignifies the product of *a* multiplied into itſelf, or the ſquare of *a*, and not 2*a*; and therefore whoever ſhews himſelf unable to diſtinguiſh betwixt 2*a* and *aa*, diſcovers as great a weakneſs as one that is not able to diſtinguiſh betwixt 2 dozen and a dozen dozen or 12 times 12.

It is a matter of no great conſequence in what order the letters are placed in a product; for *ab* and *ba* differ no more from one another than 3 times 4, and 4 times 3: and yet it is convenient that a method be obſerved, leſt like quantities be ſometimes taken for unlike; therefore the beſt way will be, to give thoſe letters the precedency in a product, that have it in the alphabet; except when an unknown quantity is multiplied by ſome known one, and then it is uſual to place the known quantity before it.

Note. For the ſignification of this mark ×, ſee introduct. at the cloſe of the 7th article. Note alſo, that this mark = is a mark of equality, ſhewing that the quantities between which it ſtands, are equal to each other, and muſt be read as the ſenſe requires: thus $2\times6=3\times4=12$ may be read thus; 2×6 equal 3×4 equal to 12: or thus; 2×6 is equal to 3×4, which is equal to 12.

Examples of ſimple algebraic multiplication.

1ſt, $4ab\times5a=20aab$. 2d, $-5ab\times6bc=-30abbc$.
3d, $6ac\times-7bd=-42abcd$. 4th, $-7a\times-b=+7ab$.
5th, $x\times3x=3xx$. 6th, $-x\times-x=+xx$.
7th, $-5ab\times+3=-15ab$. 8th, $\frac{2}{3}a\times\frac{4}{5}b=\frac{8}{15}ab$.

Diſtinctions

Diſtinctions to be obſerved betwixt addition and multiplication.

That the young algebraiſt may not confound the operations of addition and multiplication, as is frequently done; I ſhall here ſet down ſome marks of diſtinction, which he ought to attend to:

As *firſt*, a added to a makes $2a$, but a multiplied into a makes aa.

2dly, a added to o makes a, but a multiplied into o makes o.

3dly, a added to $-a$ makes o, but a multiplied into $-a$ makes $-aa$.

4thly, $-a$ added to $-a$ makes $-2a$, but $-a$ multiplied into $-a$ makes $+aa$.

5thly, a added to 1 makes $a+1$, but a multiplied into 1 makes a.

6thly, $2a$ added to $-3b$ makes $2a-3b$, but $2a$ multiplied into $-3b$ makes $-6ab$.

For a further confirmation of the learner, I have added, by way of exerciſe in his algebraic language, the following equations; which I deſire he would compute after me. Suppoſe $a=7$, and $b=3$: then we ſhall have 1ſt, $a+b=10$. 2dly, $a-b=4$. 3dly, $4a+5b=43$. 4thly, $4a-5b=13$. 5thly, $aa=49$. 6thly, $ab=21$. 7thly, $bb=9$. 8thly, $aaa=343$. 9thly, $aab=147$. 10thly, $abb=63$. 11thly, $bbb=27$. 12thly, $aa+2ab+bb=49+42+9=100$. 13thly, $aa-2ab+bb=49-42+9=16$. 14thly, $aaa+3aab+3abb+bbb=343+441+189+27=1000$. 15thly, $aaa-3aab+3abb-bbb=343-441+189-27=64$.

Of powers and their indexes.

7. Whenever in multiplication a letter is to be repeated oftener than once, it is uſual, by way of compendium, to write down the letter with a ſmall figure after

after it, ſhewing how often that letter is to be repeated: thus inſtead of xx we write x^2, inſtead of xxx we write x^3, inſtead of $xxxx$ we write x^4, &c. Theſe products are called powers of x; the figures repreſenting the number of repetitions are called the indexes of thoſe powers; and the quantity x, from whence all theſe powers ariſe, is called the root of theſe powers, or the firſt power of x; x^2 is called the ſecond power of x, x^3 the third power, x^4 the fourth power, &c. *Vieta*, *Oughtred*, and ſome other analyſts, inſtead of ſmall letters uſed capitals; and inſtead of numeral indexes, diſtinguiſhed theſe powers by names: thus *Vieta* in particular called x^2, *X ſquare*; x^3, *X cube*; x^4, *X ſquare-ſquare*; x^5, *X ſquare-cube*; x^6, *X cube-cube*; x^7, *X ſquare-ſquare-cube*, &c: which names *Oughtred* contracted, and wrote them thus; Xq, Xc, Xqq, Xqc, Xcc, $Xqqc$, &c.: but now theſe names are pretty much out of uſe, except the two firſt, when applied to a line ſquared or cubed.

If we ſuppoſe $x=5$, we ſhall have $2x=10$, $x^2=25$, $3x=15$, $x^3=125$, $4x=20$, $x^4=625$, &c.

The multiplication of theſe powers is eaſy: thus $x^2 \times x^3 = x^5$, becauſe $xx \times xxx = xxxxx$: whence it may be obſerved, that the addition of indexes will always anſwer to the multiplication of powers, provided they be powers of the ſame quantity; for as $2+3=5$, ſo $x^2 \times x^3 = x^5$, &c: but if they be powers of different quantities, their indexes muſt not be added: thus $a^2 \times x^3 = a^2x^3$, and $a^2x^3 \times a^4x^5 = a^6x^8$. And here it muſt be obſerved, that if a number be found between two letters, it muſt always be referred to the former letter; thus a^2x^3 does not ſignify $a \times 2x^3$, but $a^2 \times x^3$.

The multiplication of ſurds.

8. This mark $\surd$ ſignifies the ſquare root of the number to which it is prefixed, and is generally prefixed to numbers whoſe ſquare root cannot be otherwiſe expreſſed, either by whole numbers or fractions:

thus $\sqrt{2}$ ſignifies the ſquare root of 2; $\sqrt{a}$ the ſquare root of a, &c. Theſe roots are commonly called ſurd roots, or irrational roots, becauſe their proportion to unity cannot be expreſſed in numbers.

Whenever two ſurd numbers are to be multiplied together, the ſhorteſt way will be, to multiply the numbers themſelves one into the other without any regard to the radical ſign, and then to prefix the radical ſign to the product. Thus if $\sqrt{a}$ is to be multiplied into $\sqrt{b}$, the product will be $\sqrt{ab}$; which I thus demonſtrate: let $\sqrt{a}=x$, and $\sqrt{b}=y$; then will $x^2=a$, and $y^2=b$, and $x^2y^2=ab$, and $xy=\sqrt{ab}$; but xy, or $x\times y=\sqrt{a}\times\sqrt{b}$ by the ſuppoſition; therefore, $\sqrt{a}\times\sqrt{b}=\sqrt{ab}$. Thus $\sqrt{2}\times\sqrt{3}=\sqrt{6}$.

Theſe multiplications are of conſiderable uſe, not only in matters of ſpeculation, but alſo in practice: for ſuppoſe I had occaſion to multiply the ſquare root of 2 into the ſquare root of 3, if I had not this rule, I muſt firſt extract the root of 2, to what degree of exactneſs I think proper for my purpoſe: then again I muſt extract the root of 3 to the ſame degree of exactneſs, and laſtly I muſt multiply theſe two roots together, before I can obtain the number wanted: but after it is known that $\sqrt{2}\times\sqrt{3}=\sqrt{6}$, the whole operation will then be reduced to the extraction of the root of 6 only: nay it ſometimes happens, that two roots, though both irrational, ſhall have a rational product: thus $\sqrt{2}\times\sqrt{8}=\sqrt{16}=4$, and $\sqrt{ab^2}\times\sqrt{ac^2}=\sqrt{a^2b^2c^2}=abc$.

Of the multiplication of compound algebraic quantities.

9. The multiplication of compound algebraic quantities is performed, firſt by multiplying the multiplicand into every particular member of the multiplicator, and then reducing the whole product into the leaſt compaſs poſſible.

As for example; let it be required to multiply this compound quantity $6x-7a-8b$ into this compound quantity $2x-3a+4b$: here having put down the multiplicand, and the multiplicator under it, and beginning at the left hand (for it is all one which way the operation is carried on), I multiply the whole multiplicand into $2x$, the first member of my multiplicator, and the product is $12xx-14ax-16bx$, which I put down: then I multiply the multiplicand into $-3a$, the next member of the multiplicator, and the product is $-18ax+21aa+24ab$; whereof the first member $-18ax$, I place under $-14ax$ before found, being of the same denomination, for the conveniency of adding; the rest, to wit, $+21aa+24ab$, I place in the first line: this done, I now multiply by $4b$, the last member of the multiplicator, and the product is $24bx-28ab-32bb$; whereof I place $24bx$ under $-16bx$, and $-28ab$ under $+24ab$, and the last member $-32bb$ I place in the first line, as having no quantity of the same denomination to join with it: lastly I reduce the whole product into the least compass possible; and it stands thus: $12xx-32ax+8bx+21aa-4ab-32bb$. See the work:

$$\begin{array}{l} 6x\ -7a\ -8b \\ 2x\ -3a\ +4b \\ \hline 12xx\ -14ax\ -16bx\ +21aa\ +24ab\ -32bb \\ \qquad -18ax\ +24bx\ \qquad -28ab \\ \hline \text{Sum}\ 12xx\ -32ax\ +8bx\ +21aa\ -4ab\ -32bb. \end{array}$$

Example 2d.

$$\begin{array}{l} 3x+4a\ -5b \\ 3x-4a\ +5b \\ \hline 9xx+12ax-15bx-16aa+20ab-25bb \\ \qquad -12ax+15bx\ \qquad +20ab \\ \hline 9xx\ \ *\ \ *\ \ -16aa+40ab-25bb. \end{array}$$

Example 3d.

$$\begin{array}{l} 6xx-7ax+8aa \\ 2xx-3ax+4aa \\ \hline 12x^4-14ax^3+16a^2x^2-24a^3x+32a^4 \\ \quad -18ax^3+21a^2x^2-28a^3x \\ \quad\quad +24a^2x^2 \\ \hline 12x^4-32ax^3+61a^2x^2-52a^3x+32a^4 \end{array}$$

Example 4th.

$$\begin{array}{l} a+b \\ a-b \\ \hline aa+ab-bb \\ \quad -ab \\ \hline aa \quad -bb. \end{array}$$

Example 5th.

$$\begin{array}{l} a+b \\ a+b \\ \hline aa+ab+bb \\ \quad +ab \\ \hline aa+2ab+bb. \end{array}$$

Example 6th.

$$\begin{array}{l} a-b \\ a-b \\ \hline aa-ab+bb. \\ \quad -ab \\ \hline aa-2ab+bb. \end{array}$$

N. B. A daſh over two or more quantities ſignifies that all thoſe quantities are to be taken into one conception, or to be conſidered as making up but one compound quantity: thus $\overline{a+b}\times\overline{c-d}$ does not ſignify that which ariſes from multiplying $b\times c$, and then adding $a-d$ to the product, as it might be miſtaken without the daſh; but it ſignifies the product of the whole quantity $\overline{a+b}$ multiplied into the whole quantity $\overline{c-d}$.

The proof of compound multiplication.

10. In the 3d example we multiplied $\overline{6xx-7ax+8aa}$ into $\overline{2xx-3ax+4aa}$, and the product amounted to $12x^4-32ax^3+61a^2x^2-52a^3x+32a^4$: let us try this in numbers, and ſee how it will anſwer. In order to which, we may ſuppoſe a and x equal to any two numbers whatever; but the ſimpleſt way of tryal will be to make

make a equal 1, and $x=1$; and then we ſhall have in the multiplicand $6xx=6$, $-7ax=-7$, and $+8aa=+8$, and $6-7+8=7$: therefore the multiplicand is 7: again, in the multiplicator we have $2xx=2$, $-3ax=-3$, $+4aa=+4$, and $2-3+4=3$; therefore the multiplicator is 3: and 7 the multiplicand, multiplied into 3 the multiplicator, gives 21 for the product. Let us now examine the ſeveral parts of the product, as they are here repreſented in letters, and ſee whether they will amount to that number: $12x^4=12$, $-32ax^3=-32$, $+61a^2x^2=+61$, $-52a^3x=-52$, $+32a^4=+32$; and $12-32+61-52+32$ amount to juſt 21. This may ſerve as a proof to the work, though not a neceſſary one: for it is not impoſſible but there may be a conſiſtency this way, and yet the work be falſe; but this will rarely happen, unleſs it be deſigned. But the work may ſtill be confirmed by making $a=1$, and $x=-1$; for then the multiplicand will be $6+7+8=21$; and the multiplicator $2+3+4=9$; and the product $12+32+61+52+32=189$, which is the ſame with the product of 21 the multiplicand, multiplied into 9 the multiplicator.

How general theorems may be obtained by multiplication in Algebra.

11. From theſe algebraic multiplications are derived and demonſtrated many very uſeful theorems in all the parts of Mathematicks; whereof I ſhall juſt give the learner a taſte, and then proceed to another ſubject.

In the fourth example of compound multiplication we found, that $a+b$ multiplied into $a-b$ produced $aa-bb$; whence I infer, that *The ſum and difference of any two numbers multiplied together will give the difference of their ſquares, and* vice versâ: for a and b will repreſent any two numbers at pleaſure; $a+b$ their ſum, $a-b$ their difference, and $aa-bb$ the difference of their ſquares: thus, if we aſſume any two numbers whatever, ſuppoſe 7 and 3, the difference of their

ſquares is 49—9, or 40; and 10 their ſum, multiplied into 4 their difference, makes alſo 40.

But here I am to give notice once for all, that inſtances in numbers ſerve well enough to illuſtrate a general theorem, but they muſt not by any means be looked upon as a proof of it; becauſe a propoſition may be true in ſome particular caſes inſtanced in, and yet fail in others; but whenever a propoſition is found to be true *in ſpeciebus*, that is, in letters or ſymbols, it is a ſufficient demonſtration of it, becauſe theſe are univerſal repreſentations.

In the 5th example it was ſhewn, that $a+b$ multiplied into itſelf produced $aa+2ab+bb$; whence I infer, that *If a number be reſolved into any two parts whatever, the ſquare of the whole will be equal to the ſquare of each part, and the double rectangle, or product of the multiplication of thoſe parts, added together:* thus if the number 10 be reſolved into 7 and 3; 100 the ſquare of 10, the whole, will be equal to 49 the ſquare of 7, and 9 the ſquare of 3, and 42 the double product of 7 and 3 multiplied together: for $49+9+42=100$.

In the 6th example we found, that $a-b$ multiplied into itſelf, produced, $aa-2ab+bb$; whence I infer, that *If from the ſum of the ſquares of any two numbers, be ſubtracted the double product of thoſe numbers, there will remain the ſquare of their difference:* for $aa+bb$ is the ſum of the ſquares of a and b, and $2ab$ is their double product, and $aa-2ab+bb$ was found to be the ſquare of $a-b$, that is, the ſquare of the difference of a and b: thus in the numbers 7 and 3, the ſquare of 7 is 49, the ſquare of 3 is nine, and the ſum of their ſquares is 58; and if from this be ſubtracted the double product 42, the remainder will be 16, the ſquare of 4, that is, the ſquare of the difference of the numbers 7 and 3.

Theſe two laſt theorems are in ſubſtance the fourth and ſeventh propoſitions of the ſecond book of *Euclid.*

Of

Of the diviſion of ſimple algebraic quantities.

13. The diviſion of ſimple algebraic quantities, where it is poſſible in integral terms, is performed, firſt by dividing the numeral coefficient of the dividend by the numeral coefficient of the diviſor, and then putting down after the quotient all the letters in the dividend, that are not in the diviſor; the ſign of the quotient in diviſion being determined by thoſe of the diviſor and dividend, juſt in the ſame manner as the ſign of the product in multiplication is determined by thoſe of the multiplicator and multiplicand; that is, if the ſigns of the diviſor and dividend be both alike, whether they be both affirmative, or both negative, the quotient will be affirmative, otherwiſe it will be negative: thus if the quantity $-12ab$ is divided by $-3a$, the quotient will be $+4b$; which I thus demonſtrate: In all diviſion whatever, the quotient ought to be ſuch a quantity as, being multiplied by the diviſor, will make the dividend; therefore, to enquire for the quotient in our caſe, is nothing elſe, but to enquire what number or quantity, multiplied into $-3a$, the diviſor, will produce $-12ab$, the dividend. Firſt then I aſk, what ſign multiplied into $-$, the ſign of the diviſor, will give $-$, the ſign of the dividend, and the anſwer is $+$; therefore $+$ is the ſign of the quotient: in the next place I enquire, what number multiplied into 3, the coefficient of the diviſor, will give 12, the coefficient of the dividend, and the anſwer is 4; therefore 4 is the coefficient of the quotient: laſtly I enquire, what letter multiplied into a, the letter of the diviſor, will produce ab, the denominator, or literal part of the dividend, and the anſwer is b; therefore b is the letter of the quotient: and thus at laſt we have the whole quotient, which is $+4b$. And this way of reaſoning will carry the learner through all the other caſes.

Examples of ſimple diviſion in Algebra.

Example 1ſt, $4ab) 24abbc (6bc.$
2d, $+7) -35ab (-5ab.$
3d, $-x) -3xx (+3x.$
4th, $-9ab) +72ab (-8.$
5th, $-4a^3) -60a^8 (+15a^5.$
6th, $4x^2) 60x^9 (+15x^7.$
7th, $+4a^3x^2) -60a^8x^9 (-15a^5x^7.$
8th, $b) \frac{3}{4}ab (\frac{1}{4}a.$
9th, $\frac{2}{3}) \frac{4}{3}b (\frac{6}{3}b.$

Of the notation of algebraic fractions.

Whenever a diviſion according to the foregoing method is found impoſſible, the quotient cannot be otherwiſe expreſſed than by a fraction, whoſe numerator is the dividend, and denominator the diviſor; ſee the introduction, art. 13. As, if it was required to divide a by b, which diviſion is impoſſible according to the foregoing rule, the quotient muſt be expreſſed by this fraction $\frac{a}{b}$, which is uſually read thus, a by b, that is, a divided by b, or the quotient of a divided by b: for in Algebra the word *by* is, generally ſpeaking, appropriated to diviſion, as the word *into* is to multiplication.

If the numerator, or denominator, or both, be compound quantities, the reſpective fractions muſt be written thus $\frac{a+b}{c}$, $\frac{a}{b+c}$, $\frac{a+b}{c-d}$.

If a diviſion be partly poſſible according to the foregoing rules, and partly impoſſible, it muſt be purſued as far as it is poſſible, and the reſt muſt be repreſented by a fraction, as in common diviſion: thus if $ad+bd+c$ was to be divided by d, the quotient would be $a+b+\frac{c}{d}$.

Of

Of proportion in numbers.

15. The rule of proportion in Algebra is so very little different from the rule of proportion in common arithmetick, that one example of it will be sufficient. Let then the following question be put: *If* a *gives* b, *what will* c *give?* Here the second and third terms multiplied together produce bc; and the quotient of this, divided by the first term a, cannot otherwise be expressed than by the fraction $\frac{bc}{a}$: this is evident from the notation of fractions explained in the 13th article. But as I have hitherto purposely avoided all consideration of proportion, chusing rather to appeal, upon all occasions, to the common idea every one has or thinks he has of it, than to be more particular, it may not be improper, now we come to reason more closely upon things, to enter more distinctly into the particular nature of proportion, so far at least as it relates to numbers, and shew wherein it consists.

According to *Euclid*, four numbers are said to be proportionable, that is, the first number is said to have the same proportion to the second, that the third hath to the fourth; or the first is said to be to the second, as the third is to the fourth, when the first number is the same multiple, part or parts, of the second, that the third is of the fourth: but it will be asked perhaps, How can we know, what parts, part, or multiple, any one number is of another? To which I answer, by a fraction, whose numerator is the former number, and denominator the latter: thus the fraction $\frac{2}{3}$ expressly shews, that the numerator 2 is two third parts of the denominator 3; for this is certain, that 1 is $\frac{1}{3}$ part of 3, and therefore 2 must be $\frac{2}{3}$ of it: for the same reason the fraction $\frac{12}{8}$ shews that the number 12 is $\frac{12}{8}$ or $\frac{3}{2}$ of the number 8; and lastly, the fraction $\frac{12}{8}$ shews that the number

ber 12 is $\frac{12}{4}$ of, or 3 times the number 4; and conſequently, that 12 is a multiple of 4, as containing it juſt 3 times without any remainder: therefore, to any one who underſtands fractions, *Euclid's* definition of proportion may be more diſtinctly expreſſed thus: *Four numbers are ſaid to be proportionable, when a fraction whoſe numerator is the firſt number, and denominator the ſecond, is equal to a fraction whoſe numerator is the third number, and denominator the fourth.* Thus 2 is to 3 as 4 is to 6, becauſe $\frac{2}{3}$ is equal to $\frac{4}{6}$; thus 12 is to 8 as 15 is to 10, becauſe $\frac{12}{8}$ equals $\frac{15}{10}$, both being reducible to $\frac{3}{2}$; thus 2 is to 6 as 4 is to 12, becauſe $\frac{2}{6}$ equals $\frac{4}{12}$, for each is equal to $\frac{1}{3}$; laſtly, 6 is to 2 as 12 is to 4, becauſe $\frac{6}{2} = \frac{12}{4} = 3$.

From this idea of proportionality may be demonſtrated a very uſeful theorem in Algebra; which is, that *Whenever four numbers are proportionable, the product of the extreme terms multiplied together will be equal to the product of the two middle terms ſo multiplied:* for let a, b, c, and d, be four proportionable numbers in their order; that is, let a be to b as c is to d; I ſay then that ad the product of the extremes will be equal to bc the product of the two middle terms: for ſince a is to b as c is to d, it follows from what has already been laid down, that the fraction $\frac{a}{b}$ is equal to the fraction $\frac{c}{d}$; multiply both the terms of the fraction $\frac{a}{b}$ into d, and both thoſe of the fraction $\frac{c}{d}$ into b (which multiplications may be made without altering the values of the fractions), and then you will have $\frac{ad}{bd} = \frac{bc}{bd}$; that is, the quotient of ad divided by bd, is equal to the quotient of bc divided by bd; therefore ad muſt be equal to bc, that is, the

the product of the extremes must be equal to the product of the middle terms. *Q. E. D.*

The converse of this proposition is also true, to wit, that *Whenever we have an equation in numbers, wherein the product of two numbers on one side is found equal to the product of two numbers on the other, such an equation may be resolved into four proportionals, by making the two numbers on either side, the extremes; and those on the other side, the middle terms:* thus if $ad = bc$; by making a and d the extremes, and b and c the middle terms, we shall have a to b as c to d: if this be denied, let a be to b as c to e; then we shall have $ae = bc$ by the last; but $ad = bc$ by the supposition; therefore $ae = ad$; therefore e equals d, and a is to b as c is to d. *Q. E. D.*

Corollary.

Whence if a, b, and c, be continual proportionals, that is, if a is to b as b is to c, we shall have $b^2 = ac$: and *è converso*, if $b^2 = ac$, then a, b, and c, will be continual proportionals.

The common properties of proportionality in numbers demonstrated.

16. From what has been delivered in the last article, may be demonstrated all or most of the common properties of proportionable numbers with a great deal of ease, some of the most useful whereof I shall here throw together into one single article, for the reader to peruse, either at present, or hereafter, as he shall see occasion.

First then, from what has been said, may the rule of three, which consists in finding a fourth proportional, be most distinctly demonstrated: for let a, b and c be three numbers given, in order to find d, a fourth proportional; then since a is to b as c is to d, you will have ad the product of the extremes, equal to

to bc the product of the middle terms; divide both ſides of the equation by a, and you will have $d = \frac{bc}{a}$: which is as much as to ſay, that if three numbers be given, a fourth proportional may be obtained by multiplying the ſecond and third numbers together, and dividing the product by the firſt.

In the rule of three inverſe, let the numbers when diſpoſed according to form be a, b, and c; then whoſoever attentively conſiders the nature of that rule, will eaſily ſee, that the fourth number there ſought for, is not to be a fourth proportional to the three numbers given as they are diſpoſed in the order a, b, c, but as they ſtand in the order c, b, a, or c, a, b, and therefore, in this caſe, the fourth number will be $\frac{ab}{c}$.

Secondly, if two proportions be equal to a third, they muſt be equal to one another, becauſe if two fractions be equal to a third, they muſt be equal to one another: thus if a is to b as c is to d, and c is to d as e is to f, we ſhall have a to b as e to f.

Thirdly, if a is to b as c is to d; then b will be to a as d to c, which is called inverſe proportion: for if a is to b as c is to d, we ſhall have $ad = bc$; make b and c the extremes, and you will have b to a as d to c.

Fourthly, if a is to b as c is to d; we ſhall have, by permutation, a to c as b to d: for ſince a is to b as c is to d, and conſequently $ad = bc$, make a and d the extremes, and c and b the middle terms, and you will have a to c as b to d.

Fifthly, if a is to b as c is to d, and any two multiplicators whatever be aſſumed, as e and f; I ſay then, that ea is to fb as ec to to fd: for ſince a is to b as c is to d, and ſo $ad = bc$; multiply both ſides of the equation by the product ef, and you will have

have $ad \times ef = bc \times ef$; but $ad \times ef = ea \times fd$, and $bc \times ef = fb \times ec$; therefore $ea \times fd = fb \times ec$; make ea and fd extremes, and the proportion will ſtand thus; ea is to fb as ec to fd. In like manner, *mutatis mutandis*, it may be demonſtrated, that if a is to b as c is to d, then $\frac{a}{e}$ will be to $\frac{b}{f}$ as $\frac{c}{e}$ is to $\frac{d}{f}$.

Sixthly, if a is to b as c is to d; then a^2 is to b^2 as c^2 is to d^2: for ſince a is to b as c is to d, and ſo $ad = bc$; ſquare both ſides of the equation, and you will have $a^2 d^2 = b^2 c^2$; make a^2 and d^2 extremes, and you will have a^2 to b^2 as c^2 to d^2. And by taking theſe ſteps backwards, it will alſo appear, that if a^2 is to b^2 as c^2 is to d^2; a is to b as c is to d, and $\sqrt{a}$ is to $\sqrt{b}$ as $\sqrt{c}$ is to $\sqrt{d}$.

Seventhly, if a is to b as c is to d; then by compoſition (as it is called) $\overline{a+b}$ is to b as $\overline{c+d}$ is to d; or $\overline{a+b}$ is to a as $\overline{c+d}$ is to c: for ſince a is to b as c is to d, and conſequently $ad = bc$; add bd to both ſides of the equation, and you will have $ad+bd = bc+bd$; but $ad+bd$ is the product of $\overline{a+b}$ multiplied into d, as is eaſily ſeen; and $bc+bd$ is the product of b multiplied into $\overline{c+d}$; therefore $\overline{a+b} \times d = b \times \overline{c+d}$; make $\overline{a+b}$ and d extremes, and you will have $\overline{a+b}$ to b as $\overline{c+d}$ to d. Again, ſince $bc = ad$, add ac to both ſides, and you will have $ac+bc = ac+ad$, that is, $\overline{a+b} \times c = a \times \overline{c+d}$; make $\overline{a+b}$ and c extremes, and you will have $\overline{a+b}$ to a as $\overline{c+d}$ to c.

Eighthly, if a is to b as c is to d; then by diviſion $\overline{a-b}$ is to b as $\overline{c-d}$ is to d; or $\overline{a-b}$ is to a

as $\overline{a-d}$ to c. This propoſition is demonſtrated by ſubtraction, juſt in the ſame manner as the laſt was by addition.

Ninthly, if to or from two numbers in any given proportion, be added or ſubtracted other two numbers in the ſame proportion, the ſums or remainders will ſtill be in the ſame proportion with the numbers firſt propoſed: thus if the numbers c and d be in the ſame proportion with the numbers a and b, that is, if as a is to b ſo is c to d, and if to or from the former two numbers be added or ſubtracted the latter, we ſhall have not only $\overline{a+c}$ to $\overline{b+d}$ as a to b, but alſo $\overline{a-c}$ to $\overline{b-d}$ as a to b: for ſince, by the ſuppoſition, a is to b as c is to d; it follows by permutation, that a is to c as b is to d; and by compoſition, that $\overline{a+c}$ is to a as $\overline{b+d}$ to b; and again by permutation, that $\overline{a+c}$ is to $\overline{b+d}$ as a is to b: in like manner by permutation and diviſion we ſhall have $\overline{a-c}$ to $\overline{b-d}$ as a to b.

Tenthly, if there be three numbers a, b, and c, and other three numbers d, e, and f, proportionable to them, and in the ſame order, that is, if as a is to b ſo d is to e, and as b is to c ſo e is to f; I ſay then, that, *ex æquo*, the extremes will be in the ſame proportion, *(viz.)* that a will be to c as d is to f: for ſince by the ſuppoſition, a is to b as d is to e; by permutation we ſhall have a to d as b to e; and for the ſame reaſon, ſince b is to c as e is to f; we ſhall have b to e as c to f: ſince then a is to d as b to e, and b to e as c to f; it follows from the ſecond propoſition, that a is to d as c to f; and by permutation, that a is to c as d to f.

Eleventhly, if there be three numbers, a, b, and c, and three other numbers d, e, and f, proportionable to them, but in a contrary order, ſo that a is to b as e to f, and b to c as d to e; I ſay, that the extremes will ſtill be proportionable, to wit, that a will be to c as d to f: for ſince a is to b as e to f, we have

$af = be$,

$af=be$; moreover, ſince b is to c as d to e, we have $cd=be$; therefore $af=cd$; make a and f extremes, and you will have a to c as d to f.

N. B. If there be two ſerieſes of numbers, as $a, b, c,$ &c.; $d, e, f,$ &c.; each ſeries conſiſting of the ſame number of terms; and if all the proportions between contiguous terms in one ſeries be reſpectively equal to all thoſe in the other, that is, each to each, as they ſtand in order; as if a be to b as d to e, and b to c as e to f, &c.; then the extreme terms of one ſeries will be proportionable to the extreme terms of the other: for the demonſtration of the tenth propoſition may be extended to as many terms as we pleaſe; and this proportionality of the extremes is ſaid to follow *ex æquo ordinate*, or barely *ex æquo*, that is from a reſpective equality of all the proportions in one ſeries to their correſpondents in the other, in an orderly manner. But if every proportion in one ſeries has an equal proportion to anſwer it in the other, but not in a correſpondent part of the ſeries; as if a be to b as e to f, and b to c as d to e, &c.; then though the extremes will ſtill be proportionable, as will be evident by continuing the demonſtration of this eleventh propoſition; yet now the proportionality of the extremes is ſaid to follow *ex æquo perturbate*, that is, from an equality of all the proportions in one ſeries to all thoſe in the other, but in a diſorderly manner.

Twelfthly, if a is to b as c is to d; we ſhall have $\overline{a+b}$ to $\overline{a-b}$ as $\overline{c+d}$ is to $\overline{c-d}$: for ſince a is to b as c is to d, we ſhall have by compoſition, $\overline{a+b}$ to a as $\overline{c+d}$ is to c; we ſhall have alſo by diviſion, $\overline{a-b}$ to a as $\overline{c-d}$ to c; and by inverſion, a to $\overline{a-b}$ as c to $\overline{c-d}$: ſince then we have $\overline{a+b}$ to a as $\overline{c+d}$ to c; and a to $\overline{a-b}$ as c to $\overline{c-d}$, that is, ſince we have three numbers, $\overline{a+b}$, a, and $\overline{a-b}$, and other three numbers proportionable to them in the ſame order, to wit, $\overline{c+d}$, c, and $\overline{c-d}$; it follows *ex æquo* that

that the extremes will be proportionable, that is, that $a+b$ will be to $a-b$ as $c+d$ is to $c-d$.

Thirteenthly, if there be a series of numbers, k, l, m, n, whereof k is to l as a to b, and l to m as c to d, and m to n as e to f; I say then that k the first term will be to n the last, as ace the product of all the other antecedents to bdf the product of all the other consequents: for k is to l as a to b, by the supposition; and we shall find that a is to b as ace to bce, by multiplying extremes and means; therefore k is to l as ace to bce; and for a like reason l is to m as bce to bde, and m is to n as bde to bdf; therefore, *ex æquo*, k is to n as ace to bdf.

Of the extraction of the square roots of simple algebraic quantities.

17. The extraction of the square root of simple algebraic quantities is so very easy, that it needs not to be insisted on. Thus the square root of aa is $+$or$-a$, the square root of $9aa$ is $+$or$-3a$, and that of $4aabb$ is $+$or$-2ab$: this is plain from the definition of the square root; for the square root of any quantity, suppose of $4aabb$, is that which, being multiplied into itself, will produce $4aabb$: now $-2ab$ multiplied into itself will produce $4aabb$, as well as $+2ab$, and therefore one quantity is as much its square root as the other.

When the square root of a quantity cannot be extracted, it is usual to signify it by this mark $\surd$: thus $\surd 2aa$ signifies the square root of $2aa$; thus $\surd\overline{aa-4b}$ signifies the square root of the whole quantity $\overline{aa-4b}$; thus $\frac{\surd\overline{aa-4b}}{2a}$ signifies a fraction whose numerator is the square root of the whole quantity $\overline{aa-4b}$, and whose denominator is $2a$; thus $\surd\frac{4ab-a^2}{12a}$ signifies

the

the ſquare root of the whole fraction, $\frac{4ab-a^3}{12a}$, that is, the ſquare root of both the numerator and denominator.

When the ſquare root of a quantity cannot be extracted, the quantity may ſometimes however be reſolved into two factors, whereof the one is a ſquare, and the other is not; and whenever this is poſſible, the root of the ſquare may be extracted, and the radical ſign may be prefixed to the other factor; thus $12aa$ equals $4aa \times 3$; therefore $\sqrt{12aa} = 2a \times \sqrt{3}$.

The ſeveral rules of fractions exemplified in algebraic quantities.

22. Fractions in Algebra are treated juſt in the ſame manner as in common arithmetic, only uſing algebraical inſtead of numeral operations; as will plainly appear from the following examples.

Examples of the reduction of fractions from higher to lower terms, according to introduction art. 7th.

The fraction $\frac{4ab}{6bc}$, dividing both the numerator and denominator by the ſame quantity $2b$, will be reduced to the fraction $\frac{2a}{3c}$, a fraction of the ſame value with the former, but expreſſed in more ſimple terms: whence we may infer, that whenever a common letter or factor is to be found in every member both of the numerator and denominator, it may be cancelled everywhere, without affecting the value of the fraction: thus the fraction $\frac{ac+bc}{cd+ce}$, expunging c, becomes $\frac{a+b}{d+e}$, a fraction of the ſame value. But if there be any one member wherein the factor is not concerned, it muſt

not be expunged at all: thus the fraction $\frac{ac+b}{cd+}$ cannot be reduced, becauſe the factor c is not to be found in e.

Note, That cancelling here, is not ſubtracting, but dividing: thus to cancel the letter b in the quantity ab, ſo as to reduce it to a, is not to ſubtract b from ab, but to divide ab by b, in which caſe the quotient will be a.

Examples of fractions reduced to the ſame denomination, according to introduction art. 8th.

1*ſt*. The fractions $\frac{a}{2}$, $\frac{b}{3}$, and $\frac{c}{4}$, when reduced to the ſame denomination, will ſtand thus; $\frac{12a}{24}$, $\frac{8b}{24}$, and $\frac{6c}{24}$.

2*d*. The fractions $\frac{a}{b}$ and $\frac{c}{d}$, ſo reduced, will ſtand thus; $\frac{ad}{bd}$ and $\frac{bc}{bd}$. 3*d*. The fractions $\frac{p}{q}$, $\frac{r}{s}$, $\frac{t}{u}$, and $\frac{x}{y}$, after reduction, will ſtand thus; $\frac{psuy}{qsuy}$, $\frac{qruy}{qsuy}$, $\frac{qsty}{qsuy}$ and $\frac{qsux}{qsuy}$. And here I cannot but obſerve, that now the rule for this reduction demonſtrates itſelf: for in this example it is impoſſible not to ſee, that all theſe fractions, notwithſtanding this reduction, ſtill retain their former values: thus the firſt fraction $\frac{psuy}{qsuy}$, by cancelling common factors, is reduced to $\frac{p}{q}$, its former value; and the ſame may be obſerved of all the reſt: and this example amounts to a demonſtration, becauſe it is comprehended in general terms. But to go on:

on: *4th.* The fractions $\frac{1}{a}$, $\frac{1}{b}$, and $\frac{1}{c}$, being reduced to the ſame denomination, become $\frac{bc}{abc}$, $\frac{ac}{abc}$, and $\frac{ab}{abc}$.

5th. And laſtly, $\frac{1}{a+b}$ and $\frac{1}{a-b}$ when thus reduced, become $\frac{a-b}{aa-bb}$ and $\frac{a+b}{aa-bb}$: for 1 the numerator of the firſt fraction multiplied into $a-b$, the denominator of the ſecond, makes $a-b$; and 1 the numerator of the ſecond fraction multiplied into $a+b$, the denominator of the firſt, makes $a+b$; and the product of the two denominators $a+b$ and $a-b$ multiplied together is $aa-bb$, as in the 4th example of the 9th article.

Examples of addition in fractions, according to introduction art. 9th.

1ſt. Theſe fractions $\frac{a}{2}$, $\frac{b}{2}$ and $\frac{-c}{2}$, when added together, make $\frac{a+b-c}{2}$.

2d. The fraction $\frac{a+b}{2}$ added to the fraction $\frac{a-b}{2}$ makes $\frac{2a}{2}$ or a.

3d. The fractions $\frac{a}{2}$, $\frac{-b}{3}$ and $\frac{+c}{4}$, when added together, make $\frac{12a-8b+6c}{24}$

4th. The fraction $\frac{a}{b}$ added to the fraction $\frac{c}{d}$ makes $\frac{ad+bc}{bd}$.

5th. a added to $\frac{b}{c}$, that is, $\frac{a}{1}$ added to $\frac{b}{c}$, makes $\frac{ac+b}{c}$.

6th. $\frac{1}{a}$ added to $-\frac{1}{b}$ makes $\frac{b-a}{ab}$.

7th. The fractions $\frac{p}{q}$, $\frac{r}{s}$, $\frac{t}{u}$, and $\frac{x}{y}$, when added together, make $\frac{psuy+qruy+qsty+qsux}{qsuy}$.

8th. $\frac{a}{b}$ added to $\frac{1}{c}$ gives $\frac{ac+b}{bc}$.

9th. $\frac{1}{a+b}$ added to $\frac{1}{a-b}$ gives $\frac{2a}{aa-bb}$. See the 5th example of fractions reduced to the same denomination.

Examples of subtraction in fractions, according to introduction art. 10*th.*

Note first, If the signs of both the numerator and denominator of any fraction be changed, which is no more than multiplying both terms into -1, the value of the fraction will still remain.

Secondly, The denominator of a fraction is always supposed to be affirmative; and therefore if at any time it happens to be otherwise, it must be made affirmative by changing the signs of both terms.

Thirdly, $+\frac{a}{b}$ and $-\frac{a}{b}$ are the same in effect as $\frac{+a}{b}$ and $\frac{-a}{b}$, as is evident from the nature of division: and sometimes this latter way of notation is more convenient than the former.

Fourthly,

Fourthly, Therefore the ſign of the numerator is the ſign of the whole fraction; and to change the ſign of the former, is the ſame in effect as to change the ſign of the latter.

Fifthly, Whenever one algebraic fraction is to be ſubtracted from another, the ſafeſt way will be to change the ſign of the numerator of the fraction to be ſubtracted, and to place it after the other, and then to reduce them at laſt into one fraction: for if the ſubtraction be deferred till after the reduction is over, one may make a miſtake, and ſubtract the wrong quantity. Thus, 1ſt, $\frac{4b}{5}$ ſubtracted from $\frac{2a}{3}$ gives $\frac{2a}{3}-\frac{4b}{5}=\frac{10a-12b}{15}$.

2d. $\frac{r}{s}$ ſubtracted from $\frac{p}{q}$ gives $\frac{p}{q}-\frac{r}{s}=\frac{ps-qr}{qs}$.

3d. $\frac{b}{c}$ ſubtracted from a gives $\frac{a}{1}-\frac{b}{c}=\frac{ac-b}{c}$.

4th. $\frac{1}{a+b}$ ſubtracted from $\frac{1}{a-b}$ gives $\frac{1}{a-b}\ \frac{-1}{a+b}$ $\frac{2b}{aa-bb}$.

Examples of multiplication in fractions.

The multiplication of fractions is performed by multiplying the numerator and denominator of the multiplicand, into the numerator and denominator of the multiplicator reſpectively.

Thus 1ſt. $\frac{p}{q}\times\frac{r}{s}=\frac{pr}{qs}$.

2d. $\frac{3p}{4q}\times\frac{5q}{6r}=\frac{15pq}{24qr}=\frac{5p}{8r}$.

3d. $\frac{a}{b}\times c$ or $\frac{a}{b}\times\frac{c}{1}=\frac{ac}{b}$.

4th. $\frac{a}{b} \times b = \frac{ab}{b} = a.$

5th. $\frac{3a}{4b} \times 20b = \frac{60ab}{4b} = 15a.$

6th. $\frac{4a}{5} \times \frac{7}{8a} = \frac{28a}{40a} = \frac{7}{10}.$

7th. $\frac{3a}{4b} \times \frac{3a}{4b} = \frac{9aa}{16bb}.$

8th. $\frac{a}{b} \times \frac{c}{d} \times \frac{e}{f} = \frac{ace}{bdf}.$

9th. $\overline{a + \frac{b}{c}} \times d$, or $\frac{\overline{ac+b}}{c} \times \frac{d}{1} = \frac{acd+bd}{c}.$

10th. $\overline{d + \frac{e}{f}} \times \frac{g}{b}$, or $\frac{df+e}{f} \times \frac{g}{b} = \frac{dfg+eg}{fb}.$

11th. $\overline{a + \frac{b}{c}} \times \overline{d + \frac{e}{f}}$, or $\frac{ac+b}{c} \times \frac{df+e}{f} = \frac{acdf+ace+bdf+be}{cf}.$

This multiplication might alſo be performed thus:

$$d + \frac{e}{f}$$
$$a + \frac{b}{c}$$
$$ad + \frac{ae}{f} + \frac{bd}{c} + \frac{be}{cf}.$$

12th. $\overline{a + \frac{b}{c}} \times \overline{a + \frac{b}{c}} = \frac{aacc+2abc+bb}{cc}$;

Or, $aa + \frac{2ab}{c} + \frac{bb}{cc}$. See the work:

$$\begin{array}{r} a+\frac{b}{c} \\ a+\frac{b}{c} \\ \hline aa+\frac{ab}{c}+\frac{bb}{cc} \\ +\frac{ab}{c} \\ \hline aa+\frac{2ab}{c}+\frac{bb}{cc} \end{array}$$

Examples of diviſion in fractions.

Diviſion in fractions is performed by multiplying the direct terms of the dividend into the inverted terms of the diviſor: thus,

1ſt. $\frac{r}{s}) \frac{p}{q} (\frac{ps}{qr}$. 2d. $\frac{b}{c}) \frac{1}{a} (\frac{c}{ab}$.

3d. $\frac{1}{c}) \frac{a}{b} (\frac{ac}{b}$. 4th. $c) \frac{a}{b} (\frac{a}{bc}$.

5th. $\frac{1}{c}) \frac{ab}{c} (\frac{abc}{c}$, or ab.

6th. $d+\frac{e}{f}) a+\frac{b}{c} (\frac{acf+bf}{cdf+ce}$.

7th. $\sqrt{b}) \sqrt{a} (\frac{\sqrt{a}}{\sqrt{b}} = \sqrt{\frac{a}{b}}$: for if we make $x = \frac{\sqrt{a}}{\sqrt{b}}$, we ſhall have $xx = \frac{a}{b}$, and $x = \sqrt{\frac{a}{b}}$.

I ſhall only give one example more, and that ſhall be of the rule of proportion, as follows: *If* $\frac{a}{b}$ *give* $\frac{c}{d}$, *what will* $\frac{e}{f}$ *give?* Anſwer, $\frac{bce}{adf}$: for $\frac{c}{d}$ the ſecond number, multiplied into $\frac{e}{f}$ the third, produces $\frac{ce}{df}$; and this divided by the firſt $\frac{a}{b}$ quotes $\frac{bce}{adf}$.

Of equations in Algebra; and particularly of ſimple equations, together with the manner of reſolving them.

23. An equation in Algebra is a propoſition wherein one quantity is declared equal to another, or where one expreſſion of any quantity is declared equal to another expreſſion of the ſame quantity: as when we ſay $\frac{2}{4} = \frac{3}{6}$; where $\frac{2}{4}$ is ſaid to poſſeſs one ſide of the equation, and $\frac{3}{6}$ the other.

An affected quadratic equation is an equation conſiſting of three different ſorts of quantities; one wherein the ſquare of the unknown quantity is concerned, another wherein the unknown quantity is ſimply concerned, and a third wherein it is not concerned at all: as if $xx - 2x = 3$; ſuppoſing x to be an unknown quantity.

If either the term wherein the ſimple power of x is concerned, as $-2x$, or that which is called the abſolute term; to wit, 3, be wanting, the equation is ſtill a quadratic equation, though incompleat. Some indeed there are, who rank this latter ſort of equations under the denomination of ſimple equations; and ſo ſhall we, upon account of their eaſy reſolution; though, properly ſpeaking, a ſimple equation is that wherein ſome ſimple power of the unknown

unknown quantity is concerned, all others being excluded: as if $3x = 6$; $2x + 3 = 4x - 5$, &c.

The uſe of theſe equations is for repreſenting more conveniently and more diſtinctly the conditions of problems, when tranſlated out of common language into that of Algebra. As for example; let it be propoſed to find a number with the following property, to wit, that $\frac{2}{3}$ of it with 4 over may amount to the ſame as $\frac{7}{12}$ of it with 9 over: here, putting x for the unknown quantity, the condition of this problem, when tranſlated out of common language into that of Algebra, will be repreſented by the following equation, to wit, $\frac{2x}{3} + 4 = \frac{7x}{12} + 9$: for $\frac{2}{3}$ of x, that is, $\frac{2}{3}$ of $\frac{x}{1}$ is $\frac{2x}{3}$; therefore $\frac{2x}{3} + 4$ ſignifies $\frac{2}{3}$ of x with 4 over: and ſince this expreſſion, according to the problem, amounts to the ſame with the other, to wit, $\frac{7x}{12} + 9$; hence it is that we pronounce them equal to one another.

Now ſince, in the foregoing equation, as well as in almoſt all others ariſing immediately from the conditions of problems themſelves, the unknown quantity is embarraſſed and entangled with ſuch as are known, the way to diſengage it from ſuch known quantities, ſo that itſelf alone poſſeſſing one ſide of the equation, may be found equal to ſuch as are entirely known on the other, that is, in the preſent caſe, to determine the value of the unknown quantity x, is what is commonly called the reſolution of an equation: for the effecting of which, ſeveral axioms and proceſſes are required; ſome whereof, namely ſuch as moſt frequently occur, I ſhall here put down; the reſt I ſhall take notice of occaſionally, as they offer themſelves.

Of

Of the resolution of simple equations.

AXIOM 1.

Whenever a fraction is to be multiplied by a whole number, it will be sufficient to multiply only the numerator by that number, retaining the denominator the same as before. Thus $\frac{4}{5}$ multiplied into 2, gives $\frac{8}{5}$, for the same reason that 4 shillings multiplied into 2 gives 8 shillings: thus in the first example following, $\frac{7x}{12}$ multiplied into 3, gives $\frac{21x}{12}$.

AXIOM 2.

But if the whole number into which the fraction is to be multiplied, be equal to the denominator of the fraction, then throw away the denominator, and the numerator alone will be the product. Thus the fraction $\frac{a}{b}$ multiplied into b, gives $\frac{ab}{b}$ or a: thus in the first example, $\frac{2x}{3}$ multiplied into 3, gives $2x$; and $\frac{21x}{12}$ multiplied into 12, gives $21x$.

AXIOM 3.

If the two sides of an equation be multiplied or divided by the same number, the two products, or quotients, will still be equal to each other. Thus in the first example, where $\frac{2x}{3}+4=\frac{7x}{12}+9$; if both sides of the equation be multiplied into 3, we shall have $2x+12=\frac{21x}{12}+27$; and if again this last equation be multiplied into 12, we shall have $24x+144=21x+324$.

AXIOM

AXIOM 4.

If a quantity be taken from either ſide of an equation, and placed on the other with a contrary ſign, which is commonly called tranſpoſition, the two ſides will be equal to each other. Thus if $7+3=10$, tranſpoſe $+3$, and you will have $7=10-3$: thus if $7-3=4$, tranſpoſe -3, and you will have $7=4+3$: thus if (as in the firſt example) $24x+144=21x+324$, tranſpoſe $21x$, and you will have $24x-21x+144=324$, that is, $3x+144=324$; and if again in this laſt equation you tranſpoſe 144, you will have $3x=324-144=180$.

Tranſpoſition, therefore, as it is here delivered, is nothing but a general name for adding or ſubtracting equal quantities from the two ſides of an equation; in which caſe it is no wonder if the ſums or differences ſtill continue equal to each other. As for inſtance, in this equation $a-b=c$, tranſpoſing $-b$ we have $a=c+b$: and what is this, after all, but adding b to both ſides of the equation? for if b be added to $a-b$, the ſum will be a; and if b be added to c, the ſum will be $c+b$; therefore $a=c+b$: again in the equation $a+b=c$, tranſpoſing $+b$, we have $a=c-b$, which is nothing elſe but ſubtracting b from both ſides of the equation.

The 1ſt Proceſs.

If, when an equation is to be reſolved, fractions be found on one or both ſides, it muſt be freed from them by multiplying the whole equation into the denominators of thoſe fractions ſucceſſively.

The 2d Proceſs.

After the equation is thus reduced to integral terms, if the unknown quantity be found on both ſides the equation, let it be brought by tranſpoſition to one and the ſame ſide, viz. to that ſide which after reduction will exhibit it affirmative.

The 3d Proceſs.

After this, if any looſe known quantities be found on the ſame ſide with the unknown, let them alſo be brought by tranſpoſition to the other ſide of the equation.

The 4th Proceſs.

If now the unknown quantity has any coefficient before it, divide all by that coefficient, and the equation will be reſolved.

The 5th Proceſs.

If the whole equation can be divided by the unknown quantity, let ſuch a diviſion be made, and the equation will be reduced to a more ſimple one. Thus in the 16th example you have $615x - 7xxx = 48x$; divide the whole equation by x, and you will have $615 - 7xx = 48$. In the 13th example you have $\frac{42x}{x-2} = \frac{35x}{x-3}$; divide the whole by x, which is done by dividing only the numerators of the two fractions, and you will have $\frac{42}{x-2} = \frac{35}{x-3}$.

The 6th Proceſs.

If at laſt the ſquare of the unknown quantity, and not the unknown quantity itſelf, appears to be equal to ſome known quantity on the other ſide of the equation, then the unknown quantity muſt be made equal to the ſquare root of that which is known. Thus in the 14th example we have $xx = 36$; therefore $x = 6$, and not 18: in the 15th, we have $xx = 64$; therefore $x = 8$, the ſquare root of 64, and not 32, its half.

Examples of the reſolution of ſimple equations.

24. This preparation being made, I ſhall now give ſome examples of the reſolution of ſimple equations; and

and my firſt example ſhall be the equation given in the laſt article, in order to trace out the number there deſcribed.

Example 1.

$$\frac{2x}{3}+4=\frac{7x}{12}+9.$$

In this equation it is plain, that there are two fractions, $\frac{2x}{3}$, and $\frac{7x}{12}$, which muſt be taken off at two ſeveral operations, thus: as 3 is the denominator of the firſt fraction, multiply the whole equation by 3, and you will have $2x+12=\frac{21x}{12}+27$: again, as the denominator of the remaining fraction is 12, multiply all by 12, and you will have $24x+144=21x+324$; which is an equation free from fractions.

2*dly*, It muſt in the next place be conſidered, that in this laſt equation $24x+144=21x+324$, the unknown quantity is concerned on both ſides, to wit, $24x$ on one ſide, and $21x$ on the other; tranſpoſe therefore $21x$, and you will have $24x-21x+144=324$, that is, $3x+144=324$. If it be aſked why I choſe to tranſpoſe $21x$ rather than $24x$; my anſwer is, that had $24x$ been tranſpoſed, the unknown quantity, or its coefficient at leaſt, after reduction, would have been negative, contrary to the rule in the ſecond proceſs; for, reſuming the equation $24x+144=21x+324$, if $24x$ be tranſpoſed, we ſhall have $144=21x-24x+324$, that is, $144=-3x+324$: but even in this caſe, another tranſpoſition will ſet all right; for if $-3x$ be tranſpoſed in this laſt equation, we ſhall then have $3x+144+324$ as before: all that can be ſaid then againſt this laſt way is, that it creates unneceſſary tranſpoſitions, which an artiſt would always endeavour to avoid.

3*dly*, Having now reduced the equation to a much greater degree of ſimplicity than before, to wit, $3x+144=324$; becauſe the unknown quantity $3x$ has

ſtill

ſtill a looſe quantity, *viz.* 144 joined with it, tranſpoſe that quantity 144 to the other ſide of the equation, and you will have $3x=324-144$, that is, $3x=180$.

N. B. By a looſe quantity I mean ſuch a one as is joined with the unknown by the ſign + or —, and not by way of multiplication, as is the coefficient 3 in the laſt equation.

4thly, By this time the quantity x is very near being diſcovered; for if $3x=180$, it is but dividing all by 3, and we ſhall have $x=60$: 60 therefore is the number deſcribed in the laſt article by this property, to wit, that $\frac{2}{3}$ of it with 4 over, will amount to the ſame as $\frac{7}{12}$ of it with 9 over: and that 60 has this property, will now be eaſily made to appear ſynthetically; for $\frac{2}{3}$ of 60 is 40, and this with 4 over is 44; moreover $\frac{7}{12}$ of 60 is 35, and this with nine over is alſo 44.

N. B. A demonſtration that proves the connection between any number and the property aſcribed to it, is either analytical or ſynthetical: if this connexion is ſhewn by tracing the number from the property, the demonſtration of it is called an analytical demonſtration; but if it is ſhewn by tracing the property from the number, the demonſtration is then ſaid to be ſynthetical.

Example 2.

$$\frac{2x}{3}+12=\frac{4x}{5}+6.$$

Here multiply by 3, and you will have $2x+36=\frac{12x}{5}+18$; multiply again by 5, and you will have $10x+180=12x+90$; tranſpoſe $10x$, and you will have $180=12x-10x+90$, that is, $180=2x+90$, or rather $2x+90=180$, for I generally chooſe to have the unknown quantity on the firſt ſide of the equation: tranſpoſe 90, and you will have $2x=180-90$, that is, $2x=90$, divide by 2, and you will have $x=45$.

The

The Proof.

The original equation was $\frac{2x}{3}+12=\frac{4x}{5}+6$: now if $x=45$, we have $\frac{2x}{3}=30$, and $\frac{2x}{3}+12=42$: again, we have $\frac{4x}{5}=36$, and $\frac{4x}{5}+6=42$: therefore $\frac{2x}{3}+12=\frac{4x}{5}+6$, becauſe the amount of both is 42.

Example 3.

$\frac{3x}{4}+5=\frac{5x}{6}+2$: therefore $3x+20=\frac{20x}{6}+8$; therefore $18x+120=20x+48$; therefore $120=20x-18x+48$, that is, $120=2x+48$; therefore $120-48=2x$, that is, $2x=72$; therefore $x=36$.

The Proof.

The original equation was $\frac{3x}{4}+5=\frac{5x}{6}+2$: now if $x=36$, we ſhall have $\frac{3x}{4}=27$, and $\frac{3x}{4}+5=32$: we ſhall alſo have $\frac{5x}{6}=30$, and $\frac{5x}{6}+2=32$; therefore if $x=36$, we ſhall have $\frac{3x}{4}+5=\frac{5x}{6}+2$.

Example 4.

$\frac{7x}{8}-5=\frac{9x}{10}-8$: therefore $7x-40=\frac{72x}{10}-64$; therefore $70x-400=72x-640$; therefore $-400=72x-70x-640$, that is, $-400=2x-640$, or rather $2x-640=-400$; therefore $2x=640-400$, that is, $2x=240$; and $x=120$.

The

The Proof.

The original equation, $\frac{7x}{8} - 5 = \frac{9x}{10} - 8$; but $x = 120$; therefore $\frac{7x}{8} = 105$; therefore $\frac{7x}{8} - 5 = 100$: moreover $\frac{9x}{10} = 108$; therefore $\frac{9x}{10} - 8 = 100$; therefore $\frac{7x}{8} - 5 = \frac{9x}{10} - 8$.

Example 5.

$\frac{5x}{9} - 8 = 74 - \frac{7x}{12}$: therefore $5x - 72 = 666 - \frac{63x}{12}$; therefore $60x - 864 = 7992 - 63x$; therefore $60x + 63x - 864 = 7992$, that is, $123x - 864 = 7992$; therefore $123x = 7992 + 864$, that is, $123x = 8856$; and $x = 72$.

The Proof.

The original equation, $\frac{5x}{9} - 8 = 74 - \frac{7x}{12}$; $x = 72$; therefore $\frac{5x}{9} = 40$; therefore $\frac{5x}{9} - 8 = 32$: again, $\frac{7x}{12} = 42$; therefore $74 - \frac{7x}{12} = 74 - 42 = 32$: therefore $\frac{5x}{9} - 8 = 74 - \frac{7x}{12}$.

Example 6.

$\frac{x}{6} - 4 = 24 - \frac{x}{8}$: therefore $x - 24 = 144 - \frac{6x}{8}$ therefore $8x - 192 = 1152 - 6x$; therefore $8x + 6x - 192 = 1152$, that is, $14x - 192 = 1152$; therefore $14x = 1152 + 192$, that is, $14x = 1344$; and $x = 96$.

The

The Proof.

The original equation, $\frac{x}{6}-4=24-\frac{x}{8}$; $x=96$; $\frac{x}{6}=16$; $\frac{x}{6}-4=12$: again, $\frac{x}{8}=12$; therefore $24-\frac{x}{8}=24-12=12$; therefore $\frac{x}{6}-4=24-\frac{x}{8}$.

Example 7.

$56-\frac{3x}{4}=48-\frac{5x}{8}$: therefore $224-3x=192-\frac{20x}{8}$; therefore $1792-24x=1536-20x$; therefore $1792=1536+24x-20x$, that is, $1792=1536+4x$; therefore $1792-1536=4x$, that is, $4x=256$; and $x=64$.

The Proof.

The original equation, $56-\frac{3x}{4}=48-\frac{5x}{8}$; $x=64$; therefore $\frac{3x}{4}=48$; therefore $56-\frac{3x}{4}$; $=56-48=8$: again, $\frac{5x}{8}=40$; therefore $48-\frac{5x}{8}=48-40=8$; therefore $56-\frac{3x}{4}=48-\frac{5x}{8}$.

Example 8.

$36-\frac{4x}{9}=8$: therefore $324-4x=72$; therefore $324=72+4x$; therefore $324-72=4x$, that is, $4x=252$; and $x=63$.

The Proof.

The original equation, $36 - \frac{4x}{9} = 8$; $x = 63$; therefore $\frac{4x}{9} = 28$; therefore $36 - \frac{4x}{9} = 36 - 28 = 8$.

Example 9.

$\frac{2x}{3} = \frac{176-4x}{5}$; therefore $2x = \frac{528-12x}{5}$; therefore $10x = 528 - 12x$; therefore $10x + 12x = 528$; that is, $22x = 528$; and $x = 24$.

The Proof.

The original equation, $\frac{2x}{3} = \frac{176-4x}{5}$; $x = 24$; therefore $\frac{2x}{3} = 16$: again, $4x = 96$; therefore $176 - 4x = 176 - 96 = 80$; therefore $\frac{176-4x}{5} = \frac{80}{5} = 16$; therefore $\frac{2x}{3} = \frac{176-4x}{5}$.

Example 10.

$\frac{3}{4} + \frac{180-5x}{6} = 29$: therefore $3x + \frac{720-20x}{6} = 116$; therefore $18x + 720 - 20x = 696$, that is, $720 - 2x = 696$; therefore $720 = 2x + 696$; therefore $720 - 696 = 2x$, that is, $2x = 24$; and $x = 12$.

The

The Proof.

The original equation, $\frac{3x}{4}+\frac{180-5x}{6}=29$; $x=12$; therefore $\frac{3x}{4}=9$; $5x=60$; therefore $180-5x=180-60=120$; therefore $\frac{180-5x}{6}=\frac{120}{6}=20$; therefore $\frac{3x}{4}+\frac{180-5x}{6}=29$.

Example 11.

$$\frac{45}{2x+3}=\frac{57}{4x-5}.$$

Multiply by $2x+3$, and you will have $45=\frac{114x+171}{4x-5}$; multiply by $4x-5$, and you will have $180x-225=114x+171$; therefore $180x-114x-225=171$, that is, $66x-225=171$; therefore $66x=171+225$, that is, $66x=396$; and $x=6$.

The Proof.

The original equation, $\frac{45}{2x+3}=\frac{57}{4x-5}$; $x=6$; therefore $2x=12$; therefore $2x+3=15$; therefore $\frac{45}{2x+3}=\frac{45}{15}=3$: again, $4x=24$; therefore $4x-5=19$; therefore $\frac{57}{4x-5}=\frac{57}{19}=3$; therefore $\frac{45}{2x+3}=\frac{57}{4x-5}$.

Example 12.

$\frac{128}{3x-4} = \frac{216}{5x-6}$: therefore $128 = \frac{648x-86}{5x-6}$

therefore $640x - 768 = 648x - 864$; therefo

$-768 = 648x - 640x - 864$, that is, $-768 = 8$

-864; therefore $+864 - 768 = 8x$, that is, 8

96; and $x = 12$.

The Proof.

The original equation, $\frac{128}{3x-4} = \frac{216}{5x-6}$; $x =$

therefore $3x = 36$; therefore $3x - 4 = 32$; there

fore $\frac{128}{3x-4} = \frac{128}{32} = 4$: again, $5x = 60$; there

fore $5x - 6 = 54$; therefore $\frac{216}{5x-6} = \frac{216}{54} =$

therefore $\frac{128}{3x-4} = \frac{216}{5x-6}$.

Example 13.

$\frac{42x}{x-2} = \frac{35x}{x-3}$: divide both numerators by x, a

you will have $\frac{42}{x-2} = \frac{35}{x-3}$; therefore $42 = \frac{35x-70}{x-3}$

therefore $42x - 126 = 35x - 70$; therefore $42x -$

$35x - 126 = -70$, that is, $7x - 126 = -70$

therefore $7x = 126 - 70$, that is, $7x = 56$; an

$x = 8$.

The Proof.

The original equation, $\frac{42x}{x-2} = \frac{35x}{x-3}$; $x = 8$; there

fore $x - 2 = 6$; $42x = 336$; therefore $\frac{42x}{x-2} = \frac{33}{6}$

$= 56$

$= 56$: again, $x - 3 = 5$; and $35x = 280$; therefore $\frac{35x}{x-3} = \frac{280}{5} = 56$; therefore $\frac{42x}{x-2} = \frac{35x}{x-3}$.

Example 14.

$\frac{xx-12}{3} = \frac{xx-4}{4}$: therefore $xx - 12 = \frac{3xx-12}{4}$; therefore $4xx - 48 = 3xx - 12$; therefore $4xx - 3xx - 48 = -12$, that is, $xx - 48 = -12$; therefore $xx = +48 - 12$, that is, $xx = 36$; and $x = 6$.

The Proof.

The original equation, $\frac{xx-12}{3} = \frac{xx-4}{4}$; $x = 6$; therefore $xx = 36$; therefore $xx - 12 = 24$; therefore $\frac{xx-12}{3} = \frac{24}{3} = 8$: again, $xx - 4 = 32$; therefore $\frac{xx-4}{4} = \frac{32}{4} = 8$; therefore $\frac{xx-12}{3} = \frac{xx-4}{4}$.

Example 15.

$\frac{5xx}{16} - 8 = 12$: therefore $5xx - 128 = 192$; therefore $5xx = 192 + 128$, that is, $5xx = 320$; therefore $xx = 64$; and $x = 8$.

The Proof.

The original equation, $\frac{5xx}{16} - 8 = 12$; $x = 8$; therefore $xx = 64$; therefore $5xx = 320$; therefore $\frac{5xx}{16} = \frac{320}{16} = 20$; therefore $\frac{5xx}{16} - 8 = 20 - 8 = 12$.

Example 16.

$615x - 7xxx = 48x$: divide the whole by x, and you will have $615 - 7xx = 48$; therefore $615 = 7xx + 48$; therefore, $615 - 48 = 7xx$, that is, $7xx = 567$; therefore, $xx = 81$; and $x = 9$.

The Proof.

The original equation, $615x - 7xxx = 48x$; $x = 9$; therefore $xx = 81$; therefore $xxx = 729$; $7xxx = 5103$; again, $615x = 5535$; therefore $615x - 7xxx = 5535 - 5103 = 432$: laſtly, $48x = 432$; therefore $615x - 7xxx = 48x$.

THE

ELEMENTS OF ALGEBRA.

BOOK II.

Preparations for the ſolution of Algebraic problems.

Art. 25. IN ſolving the following problems, I ſhall make uſe of a ſort of mixt Algebra, uſing letters only in repreſenting unknown quantities, and numbers for ſuch as are known. This method, as I take it, will be the beſt to begin with: but afterwards, when my young ſcholar has been ſufficiently exerciſed in this way, I ſhall then introduce him into pure Algebra, which he will find much more extenſive than the former, not only as it enables him analytically to find out general ſolutions, taking in all the particular caſes that can be propoſed in the problem to which the ſolution belongs, but alſo as it enables him afterwards to demonſtrate the ſame ſolutions or theorems ſynthetically.

And becauſe I am not yet to ſuppoſe him ſkilled in any of the mathematical ſciences, I ſhall draw my problems, generally ſpeaking, from numbers, either conſidered abſtractedly, or elſe as they relate to common life.

If a problem be juſtly propoſed, it ought to have as many independent conditions comprehended in it, expreſsly or implicitly, as there are unknown quantities to be diſcovered by them; and it muſt be the chief buſineſs of an Algebraiſt, to ſearch out, ſift and diſtinguiſh theſe conditions one from another, before ever he enters upon the ſolution of his problem.

I ſaid, that ſo many conditions ought to be comprehended in the problem expreſsly or implicitly, becauſe it may happen, that a condition may not be expreſſed in a problem, and yet be implied in the nature of the thing: thus in the 44th problem, where ſeveral rods are to be ſet upright in a ſtreight line, at certain intervals one from another, it is implied, though not expreſſed, that the number of intervals muſt be leſs than the number of rods by unity.

Sometimes a condition may be introduced into a problem, that includes two or more conditions; as when we ſay, four numbers are in continual proportion, we mean, not only that the firſt number is to the ſecond as the ſecond is to the third, but alſo, that the ſecond number is to the third as the third is to the fourth.

Whenever a problem is propoſed to be ſolved algebraically, the Algebraiſt muſt ſubſtitute ſome letter of the alphabet for the unknown quantity: and if there be more unknown quantities than one, the reſt muſt receive their names from ſo many conditions of the problem: and if the problem be juſtly ſtated and examined, there will ſtill remain a condition at laſt, which, tranſlated into algebraic language, will afford him an equation, the reſolution whereof will give the unknown quantity for which the ſubſtitution was made; and when this unknown quantity is once diſcovered, the reſt will be eaſily diſcovered by their names. Suppoſe there are four unknown quantities in a problem; then there ought to be four conditions: now the firſt unknown quantity receives its name arbitrarily without any condition; therefore the other

three

three muſt take up three of the conditions of the problem for their names; and the fourth condition will ſtill be left to furniſh out an equation.

The learner muſt here be very careful to make no poſitions but what are ſufficiently juſtifiable, either from the expreſs conditions of the problem, or from the nature of the thing; all the liberty he is allowed in caſes of this nature is, that he is not obliged to draw out the conditions in the ſame order as they are given him in the problem, but may make uſe of them in ſuch an order as he thinks will be moſt convenient for his purpoſe; provided that he does not make uſe of the ſame condition twice, except in company with others that have not been conſidered.

My method in the forty-four following problems will be, to put down the anſwer immediately after the problem, and then the ſolution: for, in my opinion, this way of putting down the anſwer firſt, will not only ſerve to illuſtrate the following ſolution, but may alſo ſerve to fix the problem more firmly in the minds of young beginners, who are but too apt to neglect it, and to ſubſtitute chimerical notions of their own, that are not to be juſtified, either from the conditions of the problem, or common ſenſe.

After the learner has run over ſome of theſe problems, and has got a tolerable inſight into the method of their reſolution, it will be very proper for him to begin again, and to attempt the ſolution of every problem himſelf, and not to have recourſe to the ſolutions here given, but in caſes of abſolute neceſſity: but after the work is over, he may then compare his own ſolution with that which is here given, and may alter or reform it as he thinks fit.

The ſolution of ſome problems producing ſimple equations.

Problem 1.

26. *What two numbers are thoſe, whoſe difference is* 14, *and whoſe ſum, when added together, is* 48?

Anſ.

Anſ. The numbers are 31 and 17: for $31-17=14$; and $31+17=48$.

SOLUTION.

In this problem there are two unknown quantities, to wit, the two numbers ſought; and there are two conditions; firſt, that the leſs number when ſubtracted from the greater muſt leave 14; and ſecondly, that the two numbers when added together muſt make 48: therefore I put x for the leſs number; and to find a name for the greater, I have recourſe to the firſt condition of the problem, which informs me, that the difference betwixt the two numbers ſought is 14; therefore, if I call the leſs number x, I ought to call the greater $x+14$: thus then I have got names for both my unknown quantities, and have ſtill a condition in reſerve for an equation, which is the ſecond: now according to this ſecond condition, the two numbers ſought, when added together, muſt make 48; therefore x and $x+14$ when added together muſt make 48; but x and $x+14$ when added together make $2x+14$; whence I have this equation, $2x+14=48$; therefore $2x=48-14=34$; therefore x, or the leſs number $=17$, and $x+14$, or the greater number $=31$, as above.

In our ſolution of this problem, the notation was drawn from the firſt condition, and the equation from the ſecond; but the notation might have been drawn from the ſecond condition, and the equation from the firſt, thus: put x for the leſs number ſought; then becauſe the ſum of both the numbers is 48, if you ſubtract the leſs number x from 48, the remainder $48-x$ will be the greater number, ſo that the two numbers ſought will be x, and $48-x$: ſubtract the former number from the latter, and the remainder or difference will be $48-2x$; but, according to the firſt condition of the problem, this difference ought to be 14; therefore $48-2x=14$: reſolve this equation, and you will have $x=17$, and $48-x=31$, as above.

PROBLEM

PROBLEM 2.

27. *Three perſons,* A, B *and* C, *make a joint contribution, which in the whole amounts to* 76 *pounds: of this,* A *contributes a certain ſum unknown;* B *contributes as much as* A, *and* 10 *pounds more; and* C *as much as both* A *and* B *together: I demand their ſeveral contributions.*

Anſ. A contributes 14 pounds, *B* 24, and *C* 38: for $14+10=24$, and $14+24=38$, and $14+24+38=76$.

SOLUTION.

In this problem there are three unknown quantities, and there are three conditions for finding them out; firſt, that the whole contribution amounts to 76 pounds; ſecondly, that *B* contributes as much as *A*, and 10 pounds more; and laſtly, that *C* contributes as much as both *A* and *B* together.

Theſe things being ſuppoſed, I firſt put x for *A's* contribution; then ſince, according to the ſecond condition, *B* contributes as much as *A*, and 10 pounds more, I put $x+10$ for *B's* contribution; laſtly, ſince *C* contributes as much as both *A* and *B* together, I add x and $x+10$ together, and ſo put down the ſum $2x+10$ for *C's* contribution: thus have I got names for all my unknown quantities, and there remains ſtill one condition unconſidered for my equation, which is, that all the contributions added together make 76 pounds; therefore I add x, and $x+10$, and $2x+10$ together, and ſuppoſe the ſum $4x+20=76$; therefore $4x=76-20=56$; therefore x, or *A's* contribution, equals 14; $x+10$, or *B's* contribution, equals 24; and $2x+10$, or *C's* contribution, equals 38, as above.

PROBLEM 3.

28. *Suppoſe all things as before, except that now, the whole contribution amounts to* 276 *pounds; that of this,*

this, A *contributes a certain ſum unknown; that* B *contributes twice as much as* A, *and* 12 *pounds more; and* C *three times as much as* B, *and* 12 *pounds more! I demand their ſeveral contributions,*

Anſ. A contributes 24 pounds, *B* 60, and *C* 192: for $24\times2+12=60$; and $60\times3+12=192$; and $24+60+192=276$.

SOLUTION.

Put x for *A's* contribution; then, becauſe *B* contributes twice as much as *A*, and 12 pounds more, *B's* contribution will be $2x+12$; therefore, if *C* had contributed juſt three times as much as *B*, his contribution would have amounted to $6x+36$; but, according to the problem, *C* contributes this, and 12 pounds more; therefore *C's* contribution is $6x+48$; add theſe contributions together, to wit, x, $2x+12$, and $6x+48$, and you will have $9x+60=276$: therefore $9x=276-60=216$; and x, or *A's* contribution, equals 24; whence $2x+12$, or *B's* contribution, equals 60; and $6x+48$, or *C's* contribution, equals 192, as above.

ADVERTISEMENT.

I know not whether it may not be thought impertinent here to put the learner in mind, that after x was found equal to 24, the other two unknown quantities, $2x+12$, and $6x+48$ were found, by ſubſtituting 24 inſtead of x.

PROBLEM 4.

29. *One begins the world with a certain ſum of money, which he improved ſo well by way of traffick, that, at the year's end, he found he had doubled his firſt ſtock, except an hundred pounds laid out in common expences; and ſo he went on every year doubling the laſt year's ſtock, except a hundred a year expended as before; and at the end of three years, found himſelf juſt three times as rich as at firſt: What was his firſt ſtock?*

Anſ. 140 pounds: for the double of this is 280, and 280—100=180 pounds at the end of the firſt year; the double of this laſt is 360, and 360—100=260 pounds at the end of the ſecond year; again, the double of this is 520, and 520—100=420 pounds at the end of the third year; and 420 pounds is juſt three times as much as 140 pounds, his firſt ſtock.

SOLUTION.

Put x for his firſt ſtock, that is, let x be the number of pounds he began with; then the double of this is $2x$, and therefore he will have $2x$—100 at the end of the firſt year; the double of this is $4x$—200; therefore he will have $4x$—200—100, that is, $4x$—300 at the end of the ſecond year; the double of this is $8x$—600; therefore he will have $8x$—600—100, that is, $8x$—700 at the end of the third year; but according to the problem, he ought to have three times his firſt ſtock, that is, $3x$, at the end of the third year; therefore $8x$—700=$3x$; therefore $8x$—$3x$—700=0, that is, $5x$—700=0; therefore $5x$=700; and x, or his firſt ſtock, equals 140, as above.

To this problem I ſhall add another of a like kind for the learner to ſolve himſelf.

One goes with a certain quantity of money about him to a tavern, where he borrows as much as he had then about him, and out of the whole, ſpends a ſhilling; with the remainder he goes to a ſecond tavern, where he borrows as much as he had then left, and there alſo ſpends a ſhilling; and ſo he goes on to a third, and a fourth tavern, borrowing and ſpending as before; after which he had nothing left: I demand how much money he had at firſt about him.

Anſ. $\frac{15}{16}$ of one ſhilling, that is, 11 pence farthing.

PROBLEM 5.

30. *One has ſix ſons, each whereof is four years older than his next younger brother; and the eldeſt is three times as old as the youngeſt: What are their ſeveral ages?*

Anſ.

Anſ. 10, 14, 18, 22, 26, 30: for 30, the age of the eldeſt, will then be juſt three times 10, that is, three times the age of the youngeſt.

SOLUTION.

For their ſeveral ages put x, $x+4$, $x+8$, $x+12$, $x+16$, $x+20$; then according to the problem $x+20$ the age of the eldeſt, ought to be equal to $3x$, that is, three times the age of the youngeſt; ſince then $3x=x+20$, we ſhall have $3x-x=20$, that is, $2x=20$, and $x=10$, as above.

PROBLEM 6.

31. *There is a certain fiſh whoſe head is* 9 *inches; the tail is as long as the head and half the back; and the back is as long as both the head and the tail together: I demand the length of the back, and of the tail.*

Anſ. The length of the back is 36 inches, and that of the tail 27: for $27=9+\frac{36}{2}$; and $36=9+27$.

SOLUTION.

For the length of the back put x; then will x be equal to the length of both head and tail together, by the ſuppoſition; therefore if from x, the length of the head and tail together, you ſubtract 9, the length of the head, there will remain $x-9$ for the length of the tail; but, according to the problem, the tail is as long as the head and half the back; therefore $x-9=\frac{x}{2}+9$; therefore $2x-18=x+18$; therefore $2x-x-18=18$, that is, $x-18=18$; and x, the length of the back, equals $18+18=36$; therefore $x-9$, the length of the tail, equals 27, as above.

PROBLEM 7.

32. *One has a leaſe for* 99 *years; and being aſked how much of it was already expired, anſwered, that two thirds of the time paſt was equal to four fifths of the time to come; I demand the times paſt, and to come.*

An

Anſ. The time paſt was 54 years; and the whole term of years was 99; therefore the time to the expiration of the leaſe was 45 years: now $\frac{2}{3}$ of 54 is 36; and $\frac{4}{5}$ of 45 is 36.

SOLUTION.

Put x for the time paſt; then, ſince the whole term of years was 99, if x the time paſt be ſubtracted from 99 the whole time, there will remain $99-x$ for the time to come; but $\frac{2}{3}$ of the time paſt is $\frac{2x}{3}$; and $\frac{4}{5}$ of the time to come is $\frac{4}{5}$ of $\frac{99-x}{1} = \frac{396-4x}{5}$; therefore $\frac{2x}{3} = \frac{396-4x}{5}$; therefore $2x = \frac{1188-12x}{5}$; therefore $10x = 1188-12x$; therefore $10x+12x = 1188$, that is, $22x = 1188$; and x the time paſt $= 54$ years; therefore $99-x$ the time to come equals 45 years.

To this problem I ſhall add two others of the ſame nature, without any ſolution.

Firſt, *To divide the number* 84 *into two ſuch parts, that three times one part may be equal to four times the other.*

Anſ. The parts are 48 and 36: for in the firſt place, $48+36=84$; and in the next place, three times $48 = 144 =$ four times 36.

Second, *To divide the number* 60 *into two ſuch parts, that a ſeventh part of one may be equal to an eighth part of the other.*

Anſ. The parts are 28 and 32; for in the firſt place, $28+32=60$; and in the next place, $\frac{1}{7}$ of 28 equals $4 = \frac{1}{8}$ of 32.

PROBLEM 8.

33. *It is required to divide the number* 50 *into two ſuch parts, that* $\frac{3}{4}$ *of one part being added to* $\frac{5}{6}$ *of the other, may make* 40.

Anſ.

Anſ. The parts are 20 and 30: for in the firſt place, $20+30=50$; and in the next place, $\frac{3}{4}$ of 20, which is 15, added to $\frac{5}{6}$ of 30, which is 25, makes 40.

SOLUTION.

Put x for one part, and conſequently $50-x$ for the other part; then we ſhall have $\frac{3}{4}$ of $x=\frac{3x}{4}$, and $\frac{5}{6}$ of $50-x=\frac{250-5x}{6}$; but, according to the problem, theſe two added together ought to make 40; whence we have this equation, $\frac{3x}{4}+\frac{250-5x}{6}=40$: multiply by 4, and you will have $3x+\frac{1000-20x}{6}=160$; multiply again by 6, and you will have $18x+1000-20x=960$, that is, $1000-2x=960$; therefore $1000=2x+960$; and $1000-960=2x$, that is, $2x=40$; and x, which is one of the parts ſought, will be 20; whence $50-x$ or the other part will be 30, as above.

Other two problems of the ſame nature.

Firſt: *It is required to divide the number* 20 *into two ſuch parts, that three times one part being added to five times the other may make* 84.

Anſ. The parts are 8 and 12: for $8+12=20$; and $8\times3+12\times5$, that is, $24+60=84$.

Second: *It is required to divide the number* 100 *into two ſuch parts, that if a third part of one be ſubtracted from a fourth part of the other, the remainder may be* 11.

Anſ. The parts are 24 and 76: for firſt, 24 added to 76 makes 100; and ſecondly; $\frac{1}{3}$ part of 24, which is 8, ſubtracted from $\frac{1}{4}$ of 76, which is 19, leaves 11.

PROBLEM

PROBLEM 9.

34. *Two perſons* A *and* B *engage at play*; A *has* 72 *guineas and* B 52 *before they begin*; *and after a certain number of games won and loſt between them,* A *riſes with three times as many guineas as* B: *I demand how many guineas* A *won of* B.

Anſ. 21: for $72+21=93$; and $52-21=31$; and $93=31\times3$.

SOLUTION.

Put x for the number of guineas *A* won of *B*, and conſequently that *B* loſt; then will, *A's* laſt ſum be $72+x$, and *B's* laſt ſum $52-x$: now, according to the problem, *A's* laſt ſum is three times as much as *B's* laſt ſum; that is, three times $52-x$, or $156-3x$; therefore $72+x=156-3x$; therefore $72+x+3x=156$, that is, $72+4x=156$; therefore $4x=156-72=84$; therefore x, the money *A* won of *B*, equals 21 guineas, as above.

PROBLEM 10.

35. *One meeting a company of beggars, gives to each four pence, and has ſixteen pence over; but if he would have given them ſix pence apiece, he would have wanted twelve pence for that purpoſe: I demand the number of perſons.*

Anſ. 14: for $14\times4+16=72=14\times6-12$.

SOLUTION.

Put x for the number of perſons; then if he gives them four pence apiece, the number of pence given will be four times as many as the number of perſons, that is, $4x$; therefore $4x+16$ will expreſs all the money he had about him; and ſo alſo will $6x-12$ by a like way of reaſoning; therefore $4x+16=6x-12$; therefore $16=6x-4x-12=2x-12$; therefore $2x=16+12=28$; and x, the number of perſons equal 14, as above.

Problem II.

36. *What two numbers are thoſe, whoſe difference is* 4, *and the difference of thoſe ſquares is* 112?

Anſ. 12 and 16: for 16—12=4, and 16×16—12×12, that is, 256—144=112.

Solution.

The leſs number, x.
The greater, $x+4$.

$$\begin{array}{r} x+4 \\ x+4 \\ \hline xx+4x+16 \\ +4x \\ \hline xx+8x+16 \end{array}$$

The ſquare of the greater, $xx+8x+16$
The ſquare of the leſs, xx
The difference of their ſquares, $8x+16$;

whence $8x+16=112$; therefore $8x=112-16=96$; therefore x the leſs number equals 12, and $x+4$ the greater equals 16, as above.

Problem. 12.

37. *What two numbers are thoſe, whereof the greater is three times the leſs, and the ſum of whoſe ſquares is five times the ſum of the numbers?*

Anſ. The numbers are 6 and 2, whoſe ſum is 8: now 6 = 3 times 2; and 6×6+2×2=40=5 times 8.

Solution.

The leſs number	x.
The greater,	$3x$.
Their ſum,	$4x$.
The ſquare of the leſs,	xx.
The ſquare of the greater,	$9xx$.
The ſum of their ſquares,	$10xx$.

But, according to the problem, the ſum of their ſquares is 5 times the ſum of their numbers, that is, 5 times $4x$ or $20x$; therefore $10xx=20x$; and $10x=20$;

$=20$; and x the leſs number $=2$; whence $3x$ the greater equals 6, as above.

Problem 13.

38. *What two numbers are thoſe, whereof the leſs is to the greater as* 2 *to* 3, *and the product of whoſe multiplication is* 6 *times the ſum of the numbers?*

Anſ. The numbers are 10 and 15, whoſe ſum is 25: for 10 is to 15 as 2 to 3. This will be plain by putting the queſtion thus; if 2 gives 3, what will 10 give? for the anſwer will be 15: theſe numbers will alſo anſwer the ſecond condition of the problem; for $10\times15=150=25\times6$.

Solution.

Put x for the leſs number; then to find the greater number ſay, if 2 gives 3, what will x give? and the anſwer is $\frac{3x}{2}$; therefore, if x ſtands for the leſs number, the greater number will be $\frac{3x}{2}$, their ſum will be $\frac{x}{1}+\frac{3x}{2}$, or $\frac{2x+3x}{2}$, or $\frac{5x}{2}$; and the product of their multiplication $x\times\frac{3x}{2}$, or $\frac{3xx}{2}$; but, according to the problem, the product of their multiplication ought to be ſix times the ſum of their numbers, that is, ſix times $\frac{5x}{2}$, or $\frac{30x}{2}$; therefore $\frac{3xx}{2}=\frac{30x}{2}$; and $3x^2=30x$; and $3x=30$; and x the leſs number equals 10; therefore $\frac{3x}{2}$ the greater number equals 15, as above.

Problem 14.

39. *Two perſons* A *and* B *were talking of their money; ſays* A *to* B, *Give me five ſhillings of your money, and I ſhall have juſt as much as you will have left: ſo* B *to* A, *Rather give me five ſhillings of your money, and I ſhall then have juſt three times as much as you will have left: How much money had each?*

Anſ. *A* had 15 ſhillings, and *B* 25: for then, *A* borrows 5 ſhillings of *B*, they will have 20 ſhillings each; on the other hand, if *A* lends *B* 5 ſhillings, then will *A* have 10 ſhillings left, and *B* will have 30, which is three times as much.

Solution.

Put x for *A's* money; then if *A* borrows five ſhillings of *B*, *A* will have $x+5$, and *B* by the ſuppoſition, will have the ſame left, to wit, $x+5$; but *B*, after having lent *A* five ſhillings, has $x+5$ left, he muſt have had $x+10$ before; therefore if x repreſents *A's* money, $x+10$ will repreſent *B's*: let us now ſuppoſe *B* to borrow 5 ſhillings of *A*; then will *B* have $x+15$, and *A* will have $x-5$; but, according to the problem, *B* in this caſe ought to have three times as much as *A* has left, that is, three times $x-5$, or $3x-15$; therefore $3x-15=x+15$; therefore $3x-x-15=15$, that is, $2x-15=15$; therefore $2x=15+15=30$; therefore x, or *A's* money, equals 15 ſhillings, and $x+10$, or *B's*, $=25$, as above.

Problem 15.

40. *What two numbers are thoſe, the product of whoſe multiplication is* 108, *and whoſe ſum is equal to twice their difference?*

Anſ. 18 and 6: for the product of their multiplication is 108; and their ſum 24, is equal to twice their difference 12.

Solution.

SOLUTION.

For the greater number I put x; then, had their ſum been 108, I ſhould for the other number have put $108-x$; but it is not the ſum of their addition, but the product of their multiplication, that is equal to 108; therefore, if one number be called x, the other will be $\frac{108}{x}$, which I thus demonſtrate: let y be the other number; then will $x \times y$ or $xy=108$ by the ſuppoſition; divide both ſides of the equation by x, and you will have $y=\frac{108}{x}$; as was to be demonſtrated. This being admitted, the difference between the greater number x, and the leſs $\frac{108}{x}$, is $x-\frac{108}{x}$; and their ſum is $x+\frac{108}{x}$: but, by the condition of the problem, this ſum ought to be equal to twice the difference, that is, to twice $x-\frac{108}{x}$ or $2x-\frac{216}{x}$; therefore $2x-\frac{216}{x}=x+\frac{108}{x}$; therefore $2xx-216=xx+108$; therefore $2xx-xx-216=108$, that is, $xx-216=108$; therefore $xx=108+216=324$; therefore x the greater number equals 18, and $\frac{108}{x}$ the leſs equals 6, as above.

PROBLEM 16.

41. *It is required to divide the number* 48 *into two ſuch parts, that one part may be three times as much above* 20, *as the other wants of* 20.

Anſ. The two parts are 32 and 16: for $32+16=48$; moreover 32 is 12 above 20, and 16 wants 4 of 20, and 12 is three times 4.

SOLUTION.

Put x for the leſs number ſought; then will $48-x$ be the greater, and the exceſs of this greater above 20 will be $28-x$, as is evident by ſubtracting 20 from $48-x$: again, the exceſs of 20 above the leſs number (which is, what the leſs number wants of 20) is $20-x$; and according to the problem, the former exceſs is three times the latter, that is, three times $20-x$; or $60-3x$; whence we have this equation, $28-x=60-3x$; therefore $28-x+3x=60$, that is, $28+2x=60$; therefore $2x=60-28=32$; therefore x the leſs part $=16$, and $48-x$ the greater $=32$, as above.

Another ſolution of the foregoing problem.

Put x for what the leſs number wants of 20; then will the leſs number be $20-x$, the greater $20+3x$, and their ſum $40+2x$; but, by the problem, their ſum is 48; therefore $40+2x=48$; therefore $2x=48-40=8$; therefore $x=4$; whence $20-x$ the leſs number $=16$, and $20+3x$ the greater $=32$.

PROBLEM 17.

42. *One has three debtors,* A, B, *and* C, *whoſe particular debts he has forgot; but thus much he could remember from his account, that* A's *and* B's *debts together amounted to* 60 *pounds;* A's *and* C's *to* 80 *pounds; and* B's *and* C's *to* 92 *pounds: I demand the particulars.*

Anſ. A's debt was 24 pounds, *B's* 36, and *C's* 56; for $24+36=60$, $24+56=80$, and $36+56=92$.

SOLUTION.

Put x for *A's* debt; then, becauſe *A's* and *B's* together made 60 pounds, *B's* debt will be $60-x$; again, becauſe *A's* and *C's* together made 80 pounds, *C's* debt muſt be $80-x$; now ſince, according to the

problem, *B's* and *C's* debts when added together make 92 pounds, I add $60-x$, and $80-x$ together, and ſuppoſe the ſum $140-2x=92$; whence $2x+92=140$; and $2x=140-92=48$; and x, that is, *A's* debt, $=24$ pounds: whence $60-x$, or *B's* debt, $=36$ pounds; and $80-x$, or *C's*, is 56 pounds, as above.

Problem 18.

43. *One being aſked how many teeth he had remaining in his head, anſwered, Three times as many as he had loſt; and being aſked how many he had loſt, anſwered, As many as, being multiplied into $\frac{1}{6}$ part of the number left, would give all he ever had at firſt: I demand how many he had loſt, and how many he had left?*

Anſ. He had loſt 8, and had 24 left: for then 24 the number left, will be equal to 3 times 8, the number loſt; and moreover 8 the number loſt, multiplied into 4, that is, into $\frac{1}{6}$ part of 24 the number left, will give $32=24+8$, all he ever had at firſt.

Solution.

Teeth loſt,	x.
left,	$3x$.
In all,	$4x$.

$\frac{1}{6}$ part of the number left $\frac{3x}{6}$, or $\frac{x}{2}$; this, multiplied into the number loſt, makes $\frac{x}{2}\times x$ or $\frac{xx}{2}$; but, according to the problem, this product is equal to all he ever had at firſt; whence $\frac{xx}{2}=4x$; and $xx=8x$; and x, the number loſt, $=8$; whence $3x$, the number left, $=24$, as above.

Problem 19.

44. *One rents 25 acres of land at 7 pounds 12 ſhillings* per annum; *which land conſiſts of two ſorts, the bet-*

ter ſort he rents at 8 *ſhillings* per *acre, and the worſe at* 5: *I demand the number of acres of each ſort.*

Anſ. He had 9 acres of the better ſort. and 16 of the worſe: for 9 times 8 ſhillings=72 ſhillings; and 16 times 5 ſhillings=80 ſhillings; and 72+80=152 ſhillings = 7 pounds 12 ſhillings.

SOLUTION.

Put x for the number of acres of the better ſort; then will $25-x$ be the number of acres of the worſe, ſort, becauſe both together make 25 acres: moreover, ſince he paid 8 ſhillings an acre for the better ſort, he muſt pay 8 times as many ſhillings as he had acres, that is, $8x$: and ſince he paid 5 ſhillings an acre for the worſe ſort, he muſt pay 5 times as many ſhillings as he had acres of this ſort, that is, $\overline{25-x} \times 5$, or $125-5x$: put both theſe rents together, and they will amount to $8x+125-5x$, or $3x+125$ ſhillings; but they amount to 152 ſhillings by the ſuppoſition; therefore $3x+125=152$; therefore $3x=152-125=27$; therefore x, the number of acres of the better ſort, $=9$, and $25-x$, the number of the worſe ſort, $=16$, as above.

PROBLEM 20.

45 *One hires a labourer into his garden for* 36 *days upon the following conditions; to wit, that for every day he laboured, he was to receive two ſhillings and ſixpence; and for every day he was abſent, he was to forfeit one ſhilling and ſixpence: now at the end of the* 36 *days, after due deductions made for his forfeitures, he received clear* 2 *pounds* 18 *ſhillings: I demand how many days he laboured, and how many he was abſent.*

Anſ. He laboured 28 days, and loitered 8: for 28 half-crowns amount to 3 pounds 10 ſhillings due to him for wages; and 8 eighteenpences amount to 12 ſhillings due from him in forfeitures; and this latter ſum ſubtracted from the former, leaves 2 pounds 18 ſhillings to be received clear.

SOLUTION.

SOLUTION.

Put x for the number of days he laboured; then will $36-x$ repreſent the number of days he was abſent: again, ſince he was to receive 30 pence for every day he laboured, the pence due to him in wages will be $30\times x$, or $30x$; and ſince he was to forfeit 18 pence for every day he was abſent, the pence due from him in forfeitures will be $18\times\overline{36-x}$, or $648-18x$: ſubtract now $648-18x$, the pence due from him in forfeitures, from $30x$, the pence due to him for wages; or, which is all one, add $18x-648$ to $30x$, and there ariſes $48x-648$, the pence to be received clear: but he received clear 2 pounds 18 ſhillings, or 696 pence, by the ſuppoſition; therefore $48x-648=696$; therefore $48x=648+696=1344$; therefore x, the number of days he laboured, $=28$; and $36-x$, the number of days he loitered, $=8$, as above.

PROBLEM 22.

47. *One lets out a certain ſum of money at* 6 per cent. *ſimple intereſt; which intereſt in* 10 *years time wanted but* 12 *pounds of the principal: What was the principal?*

Anſ. The principal was 30 pounds, and the intereſt 18 pounds $=30-12$: for as 100 pounds principal is to its annual intereſt 6 pounds, ſo is 30 pounds principal to its annual intereſt 1.8 pounds; and therefore its 10 years intereſt will be 18 pounds.

SOLUTION.

Put x for the number of pounds in the principal; then, to find its intereſt for one year, ſay, if 100 pound principal give 6 pounds intereſt, what will x principal give? and the anſwer will be $\frac{6x}{100}$; this will be the intereſt of x for one year, and therefore its intereſt

intereſt for ten years will be $\frac{60x}{100}$, or $\frac{6x}{10}$, or $\frac{3x}{5}$: but, according to the problem, this intereſt is to be $x-12$; for it is to want juſt 12 pounds of the principal, by the ſuppoſition; therefore $x-12=\frac{3x}{5}$; therefore $5x-60=3x$; therefore $5x-3x-60=0$, that is, $2x-60=0$; therefore $2x=60$, and x the principal $=30$ and $\frac{3x}{5}$ the 10 years intereſt $=18$ pounds, as above.

Problem 23.

48. *One lets out* 98 *pounds in two different parcels; one at* 5, *the other at* 6 per cent. *ſimple intereſt; and the intereſt of the whole in* 15 *years amounted to* 81 *pounds: What were the two parcels?*

Anſ. The parcel at 5 *per cent.* was 48 pounds, and the other at 6 *per cent.* was 50 pounds: for in the firſt place, $48+50=98$; and moreover, the annual intereſt of 48 pounds at 5 *per cent.* amounts to 2 pounds 8 ſhillings; and the annual intereſt of 50 pounds at 6 *per cent.* is 3 pounds; therefore the whole intereſt amounts to 5 pounds 8 ſhillings in one year; and conſequently to 81 pounds in 15 years.

Solution.

Put x for the number of pounds in the parcel at 5 *per cent.* and conſequently $98-x$ for the number of pounds in the other parcel at 6 *per cent.*; then, to find the annual intereſt of x, ſay, if 100 pounds principal give 5 pounds intereſt, what will x give? and the anſwer will be $\frac{5x}{100}$: again, for the other parcel, ſay, if 100 pounds principal give 6 pounds intereſt, what will $98-x$ give? and the anſwer will be $\frac{588-6x}{100}$: add theſe two intereſts together, to wit,

$\frac{5x}{100}$

$\frac{5x}{100}$ and $\frac{588-6x}{100}$, and the ſum will be $\frac{5x+588-6x}{100}$ that is, $\frac{588-x}{100}$ this is the intereſt of the two parcels for one year; and therefore, in 15 years time, the intereſt muſt amount to $\frac{8820-15x}{100}$; but it amounts to 81 pounds, by the ſuppoſition; therefore $\frac{8820-15x}{100}=81$; therefore $8820-15x=8100$; therefore $8820=15x+8100$; therefore $15x=8820-8100=720$; therefore x, the parcel at 5 *per cent.* $=48$ pounds; and $98-x$, the parcel at 6 *per cent.* $=50$ pounds, as above.

Problem 24.

49. *A gentleman hires a ſervant for a year, or 12 months, and was to allow him for his wages ſix pounds in money, together with a livery cloak of a certain value agreed upon: but after ſeven months, upon ſome miſdemeanor of the ſervant, he turns him off, with the aforeſaid cloak and 50 ſhillings in money; which was all that was due to him for that time: I demand the value of the cloak.*

Anſ. The value of the cloak was 48 ſhillings: for then his whole wages for 12 months would be 168 ſhillings; and by the rule of proportion, his wages for 7 months would be 98 ſhillings; whence ſubtracting 48 ſhillings, the value of the cloak, there would remain 50 ſhillings due to him in money.

Solution.

Put x for the value of the cloak in ſhillings; then will his whole wages for 12 months be $x+120$; and his wages for 7 months, may be found by the golden rule, ſaying, as 12 is to 7, ſo is $x+120$ to $\frac{7x+840}{12}$;

but,

but, according to the problem, his wages for 7 months was the cloak and 50 ſhillings in money, that is, $x+50$; therefore $x+50=\frac{7x+840}{12}$; therefore $12x+600=7x+840$; therefore $12x-7x+600=840$, that is, $5x+600=840$; therefore $5x=840-600=240$; therefore x, the value of the cloak in ſhillings, is 48, as above.

Problem 25.

50. *One diſtributes* 20 *ſhillings among* 20 *people, giving* 6 *pence apiece to ſome, and* 16 *pence apiece to the reſt: I demand the number of perſons of each denomination.*

Anſ. There were 8 perſons who received 6 pence apiece; and 12 who received 16 pence apiece: for in the firſt place, $8+12=20$ perſons; and ſince 8 ſixpences are equivalent to 4 ſhillings, and 12 ſixteenpences to 16 ſhillings, we ſhall have in the next place, $4+16=20$ ſhillings.

Solution.

Put x for the number of perſons who received 6 pence apiece; then, ſince there were 20 perſons in all, $20-x$ will be the number of thoſe who received ſixteenpence apiece: the number of pence received by the former company will be $6x$; and the number of pence received by the latter will be $\overline{20-x}\times 16$, that is, $320-16x$; and therefore the whole number of pence received will be $6x+320-16x$, or $320-10x$; but, according to the problem, there was received in the whole, 20 ſhillings, or 240 pence; therefore, $320-10x=240$; therefore $10x+240=320$; therefore $10x=320-240=80$; therefore x, the number of perſons who received ſixpence apiece, is 8, and conſequently $20-x$, the number of the reſt, is 12, as above.

Problem

PROBLEM 26.

51. *It is required to divide* 24 *ſhillings into* 24 *pieces, conſiſting only of ninepences and thirteenpencehalfpennies.*

Anſ. There muſt be 8 ninepences, and 16 thirteenpencehalfpennies; for in the firſt place, $8+16=24$ pieces; and ſince 8 ninepences are equivalent to 6 ſhillings, and 16 thirteenpencehalfpennies to 18 ſhillings, we have in the next place $6+18=24$ ſhillings.

SOLUTION.

Put x for the number of ninepences, and conſequently $24-x$ for the number of thirteenpencehalfpennies: now the number of halfpence equivalent to the former is $18x$, becauſe there are 18 halfpence in every ninepence; and the number of halfpence equivalent to the latter is $\overline{24-x}\times 27$, or $648-27x$, becauſe there are 27 halfpence in every thirteenpencehalfpenny piece: therefore the number of halfpence equivalent to the whole will be $18x+648-27x$, that is, $648-9x$; but, according to the problem, the whole amounts to 24 ſhillings, or 576 halfpence; therefore $648-9x=576$; therefore $9x+576=648$; therefore $9x=648-576=72$; therefore x, the number of ninepences, is 8; and $24-x$, the number of thirteenpencehalfpennies, is 16, as above.

PROBLEM 27.

52. *Two perſons,* A *and* B, *travelling together,* A *with* 100, *and* B *with* 48 *pounds about him, met a company of robbers, who took twice as much from* A *as from* B, *and left* A *thrice as much as they left* B: *I demand how much they took from each.*

Anſ. They took 44 pounds from *B*, and twice as much, that is, 88 pounds from *A*, ſo they left *B* 4 pounds, and *A* 12 pounds, which is 3 times 4.

SOLUTION.

SOLUTION.

Taken from B, x.
from A, $2x$.
Left B, $48-x$.
Left A, $100-2x$.

But, according to the problem, they left A three times as much as they left B, that is, three times $48-x$, or $144-3x$; therefore $100-2x=144-3x$; therefore $100-2x+3x=144$, that is, $100+x=144$; therefore x, the ſum taken from B, $=144-100=44$; and $2x$, or 88, is the ſum taken from A, as above.

PROBLEM 30.

95. *There are two places* 154 *mils diſtant from each other; from whence two perſons ſet out at the ſame time with a deſign to meet, one travelling at the rate of* 3 *miles in two hours, and the other at the rate of* 5 *miles in* 4 *hours: I demand how long and how far each travelled before they met.*

Anſ. As our travellers were ſuppoſed both to ſet out at the ſame time, and they muſt both meet at the ſame time, it follows, that each muſt perform his journey in the ſame time; I ſay then, that each performed his journey in 56 hours: for if in 2 hours the firſt travelled 3 miles, in 56 hours he muſt travel 84 miles, by the rule of proportion: in like manner, if in 4 hours the ſecond travels 5 miles, in 56 hours he muſt travel 70 miles; and $84+70=154$ miles, the whole diſtance.

SOLUTION.

Put x for the number of hours each travelled; then, to find how many miles the firſt travelled, ſay, if in 2 hours he travelled 3 miles, how far did he travel in x hours? and the anſwer is $\frac{3x}{2}$; then for the

the other ſay, if in 4 hours he travelled 5 miles, how far did he travel in x hours? and the anſwer is $\frac{5x}{4}$, therefore both their journies put together make $\frac{3x}{2} + \frac{5x}{4}$; but they both travelled the whole diſtance, 154 miles; therefore $\frac{3x}{2} + \frac{5x}{4} = 154$; therefore $3x + \frac{10x}{4} = 308$: therefore $12x + 10x$, that is, $22x = 1232$; therefore x, the number of hours each travelled, $= 56$; therefore $\frac{3x}{2}$, the number of miles the firſt travelled, $= 84$; and $\frac{5x}{4}$, the number of miles the ſecond travelled, $= 70$, as above.

Problem 31.

56. *One ſets out from a certain place, and travels at the rate of 7 miles in 5 hours; and 8 hours after, another ſets out from the ſame place, and travels the ſame road at the rate of 5 miles in 3 hours: I demand how long and how far the firſt muſt travel before he is overtaken by the ſecond.*

Anſ. The firſt muſt travel 50 hours, and conſequently 70 miles; the ſecond muſt travel 50—8, or 42 hours, and conſequently alſo 70 miles: ſince then they both ſet out from the ſame place, and the ſecond traveller has now travelled as far as the firſt, he muſt have overtaken the firſt.

Solution.

Put x for the number of hours the firſt travelled, and conſequently x—8 for the number of hours wherein the ſecond travelled: then, to find the miles travelled

travelled by the firſt, ſay, if in 5 hours he travels 7 miles, how far will he travel in x hours? and the anſwer is $\frac{7x}{5}$; then for the other ſay, if in 3 hours he travelled 5 miles, how far will he travel in $x-8$ hours, and the anſwer is $\frac{5x-40}{3}$; but as theſe two travellers both ſet out from the ſame place, and muſt come together at the ſame place, it follows, that they muſt both travel the ſame length of ſpace; therefore $\frac{5x-40}{3}=\frac{7x}{5}$; therefore $5x-40=\frac{21x}{5}$; therefore $25x-200=21x$; therefore $25x-21x-200=0$, that is, $4x-200=0$; therefore $4x=200$; and x, the hours travelled by the firſt, $=50$; whence $x-8$, the hours travelled by the ſecond, $=42$; $\frac{7x}{5}$, the miles travelled by the firſt, $=70$; and $\frac{5x-40}{3}$, the miles travelled by the ſecond, $=70$, as above.

Problem 36.

61. *A ſhepherd driving a flock of ſheep in time of war, meets a company of ſoldiers who plunder him of half his flock, and half a ſheep over; the ſame treatment he meets with from a ſecond, a third, and a fourth company, every ſucceeding company plundering him of half the flock the laſt had left, and half a ſheep over; inſomuch that at laſt he had but 7 ſheep left: I demand how many he had at firſt.*

Anſ. His flock at firſt conſiſted of 127 ſheep; and if the firſt company had only robbed him of half his flock, they would have left him $63\frac{1}{2}$ ſheep; but as they plundered him of half his flock, and half a ſheep over, they left him only 63 ſheep; in like manner the ſecond company left him 31, the third 15, and the fourth 7.

N. B.

N. B. Before I enter upon the ſolution of this problem, I muſt put the learner in mind of what he has been told before, (introduction, art. 13.) to wit, that a fraction may be halved two ways, either by halving the numerator, or doubling the denominator.

SOLUTION.

Put x for the number of his firſt flock; then, had the firſt company only taken half his flock, they would have left him the other half, *viz.* $\frac{x}{2}$; but they took half his flock and half a ſheep over; therefore they left him juſt ſo much leſs, to wit, $\frac{x}{2} - \frac{1}{2}$; or $\frac{x-1}{2}$: again, had the ſecond company only taken half what remained, they would have left him half, to wit, $\frac{x-1}{4}$; but by taking half a ſheep more, they left him $\frac{x-1}{4} - \frac{1}{2}$, that is, $\frac{2x-2-4}{8}$, or $\frac{2x-6}{8}$, or $\frac{x-3}{4}$; in like manner the third company left $\frac{x-3}{8} - \frac{1}{2}$, or $\frac{2x-6-8}{16}$, or $\frac{2x-14}{16}$, or $\frac{x-7}{8}$; and the laſt company left him $\frac{x-7}{16} - \frac{1}{2}$, or $\frac{x-15}{16}$; but they left him 7 ſheep, by the ſuppoſition; therefore $\frac{x-15}{16} = 7$; and $x-15=112$; and x his firſt number $= 127$, as above.

PROBLEM 37.

62. *One buys a certain number of eggs, half whereof he buys in at 2 a penny, and the other half at 3 a penny;*

penny; theſe he afterwards ſold out again at the rate of 5 for twopence, and, contrary to his expectation, loſt a penny by the bargain: what was the number of his eggs?

Anſ. The number of his eggs was 60; half whereof at two a penny coſt him 15 pence; and the other half at three a penny, ten pence; and the whole 25 pence: but 60 eggs ſold out at 5 for two pence, would only bring him in 24 pence, as appears by the rule of proportion; therefore he loſt a penny by the bargain.

SOLUTION.

Put x for the number of eggs; then ſay, if 2 eggs coſt one penny, what will $\frac{x}{2}$ one half of his eggs coſt? and the anſwer will be $\frac{x}{4}$; and for the ſame reaſon the other half at three a penny will coſt him $\frac{x}{6}$; ſo that for the whole he muſt pay $\frac{x}{4}+\frac{x}{6}$, or $\frac{5x}{12}$: again ſay, if five eggs were ſold for two pence, what were x eggs ſold for? and the anſwer will be $\frac{2x}{5}$; therefore $\frac{2x}{5}$ will be the number of pence he received for his eggs; ſubtract this from $\frac{5x}{12}$, the pence he paid for them, and the remainder $\frac{5x}{12}-\frac{2x}{5}$, or $\frac{x}{60}$ will be his loſs; but by the ſuppoſition, he loſt one penny; therefore $\frac{x}{60}=1$; and x the number of eggs will be 60, as above.

PROBLEM

Problem 39.

64. *It is required to divide the number* 90 *into two ſuch parts, that one part may be to the other as* 2 *to* 3.

Anſ. The numbers are 36 and 54: for in the firſt place, $36+54=90$; and in the next place, if both 36 and 54 be divided by 18, the quotients will be 2 and 3; whence I infer, that 36 is to 54 as 2 to 3; for a common diviſion by the ſame number cannot alter the proportion of the numbers divided; and therefore if, after this common diviſion, the quotients be to one another as 2 to 3, the dividends muſt be alſo in the ſame proportion.

Solution.

Put x for the leſs part, and $90-x$ for the other; then will x be to $90-x$ as 2 to 3, by the ſuppoſition; but by art. 15, whenever there are four proportionals, the product of the extremes will be equal to the product of the middle terms; here the extremes are x and 3, whoſe product is $3x$; and the middle terms are $90-x$ and 2, whoſe product is $180-2x$; therefore $3x=180-2x$; therefore $5x=180$; and x, the leſs part, $=36$; and $90-x$, the greater, $=54$, as above.

Problem 41.

66. *What number is that, which, being ſeverally added to* 36 *and* 52, *will make the former ſum to the latter as* 3 *to* 4?

Anſ. The number is 12: for $36+12$ is to $52+12$, as 48 is to 64, as $\frac{48}{16}$ is to $\frac{64}{16}$, as 3 to 4.

Solution.

Put x for the number ſought, and you will have this proportion; $36+x$ is to $52+x$ as 3 to 4. Whence by multiplying extremes and means you will have $144+4x=156+3x$; therefore $144+x=156$; therefore x the number ſought $=12$, as above.

Problem 42.

67. *A bookbinder ſells me two paper books, one containing* 48 *ſheets for* 3 *ſhillings and* 4 *pence, and another containing* 75 *ſheets for* 4 *ſhillings and* 10 *pence, both bound at the ſame price, and both of the ſame ſort of paper: I demand what he allows himſelf for binding.*

Anſ. He reckoned 8 pence for binding; ſo that the price of the paper of the firſt book was 32 pence, and the price of the paper of the latter 50 pence: now if this anſwer be juſt, the two prices ought to bear the ſame proportion to one another as the two quantities of paper; and ſo we ſhall find them: for 32 pence are to 50 pence as $\frac{32}{2}$ are to $\frac{50}{2}$, that is, as 16 to 25; and 48 ſheets are to 75 ſheets as $\frac{48}{3}$ are to $\frac{75}{3}$, that is alſo, as 16 to 25.

Solution.

Put x for the number of pence reckoned for binding; then we ſhall have $40-x$ for the price of the paper in the firſt book, and $58-x$ for the price of the paper in the ſecond book; and $40-x$ will be to $58-x$ as 48 to 75; multiply extremes and means, and you will have this equation, $2784-48x=3000-75x$; therefore $2784+27x=3000$; therefore $27x=216$; and x the number of pence reckoned for binding $=8$, as above.

Problem 43.

68. *What number is that, which, being ſeverally added to* 15, 27, *and* 45, *will give three numbers in continual proportion.*

N. B. Three numbers are ſaid to be in continual proportion, when the firſt is to the ſecond as the ſecond is to the third.

Anſ. The number ſought is 9: for $15+9=24$; and $27+9=36$; and $45+9=54$; and 24 is to 36 as 36 is to 54: for 24 is to 36 as $\frac{24}{12}$ is to $\frac{36}{12}$, that is, as

2 to

2 to 3; and 36 is to 54 as $\frac{36}{18}$ is to $\frac{54}{18}$, that is alſo, as 2 to 3.

SOLUTION.

Put x for the number ſought; then we ſhall have this proportion, $x+15$ is to $x+27$, as $x+27$ is to $x+45$; where the two middle terms are $x+27$ and $x+27$: multiply extremes and means, and you will have this equation, $xx+60x+675=xx+54x+729$; therefore $60x+675=54x+729$; therefore $6x+675=729$; therefore $6x=54$; and x the number ſought $=9$, as above.

Of the method of reſolving problems wherein more unknown quantities than one are concerned, and repreſented by different letters.

70. Hitherto we have uſed but one ſingle letter in every problem for ſome one unknown quantity in it; and if there were more, the reſt received their names from the conditions of the problem; but in caſes of a more complicated nature, where many unknown quantities are linked and entangled in one another, this method will be found very difficult; and therefore, in ſuch caſes, the Algebraiſt is allowed to uſe as many different letters as he has unknown quantities, provided he finds out as many independent equations for diſcovering their values; ſee art. 92: for though in every equation wherein more unknown quantities than one are concerned, they hinder one another from being found out, yet if as many fundamental equations at firſt be given as there are unknown quantities, it will not be difficult, in many caſes, from theſe to derive others that are more ſimple, till at laſt you come to an equation wherein but one only unknown quantity is concerned, in which caſe all the reſt are ſaid to be exterminated.

Whenever two or more equations are propoſed involving as many unknown quantities, theſe equa-

tions muſt firſt be prepared by freeing them from fractions where-ever there are any, and by ordering every particular equation ſo, that all the unknown quantities may poſſeſs one ſide of the equation, and ſuch as are known the other; or elſe, that all the quantities may poſſeſs one ſide of the equation, and a cypher the other; it will be alſo convenient, that in every particular equation, the unknown quantities be placed in the ſame order.

In laying down rules for exterminating unknown quantities, I ſhall begin with the ſimpleſt caſe firſt, which is that of two equations, and two unknown quantities; and when I have given as many examples as ſhall be thought proper in this caſe, I ſhall then proceed to others where more unknown quantities are to be exterminated.

But here I muſt not forget to advertiſe the reader, that, as I am now treating of ſimple equations, and problems producing ſuch equations, I ſhall not meddle with any caſes of extermination which lead to equations of higher forms: when I come to treat of quadratic equations, I may then perhaps add ſomething further upon this ſubject; but to undertake to explain all the various methods of exterminating unknown quantities would be an endleſs taſk, and a moſt intolerably laborious and tedious one both to the writer and the reader, whom I cannot yet ſuppoſe to be ſo far gone in Analytics, as to be willing to purchaſe this ſort of knowledge at any rate.

Let then x and y be two unknown quantities to be found out by the help of the two following equations, $4x-5y=2$, and $6x-7y=4$: or the queſtion may be ſtated thus: if $4x-5y=2$, and $6x-7y=4$, what are x and y? Now as theſe equations want no preparation, put them down one under another; then upon a bye piece of paper multiply the firſt equation ($4x-5y=2$) by 6 the coefficient of x in the ſecond equation, and the product will give this equation, $24x-30y=12$; again, multiply the ſecond equation ($6x-7y=4$) by

4,

4, the coefficient of x in the firſt equation, and the product gives $24x-28y=16$; ſubtract now either of theſe two laſt equations from the other, and x will be exterminated: I chooſe in the preſent caſe to ſubtract the former equation from the latter, that the coefficient of y after ſubtraction may be affirmative, thus;

$$\begin{array}{r} 24x-28y=16 \\ 24x-30y=12 \\ \hline *+2y=4. \end{array}$$

From this ſubtraction you have the following equation, $2y=4$, which put down under the two firſt equations to make a third; then reſolve this third equation $2y=4$, and you will have $y=2$, which put down under the reſt for a fourth equation.

Having thus found the value of $y=2$, put this value inſtead of y in the more ſimple of the two firſt equations, ſuppoſe in the equation $4x-5y=2$, and you will have $4x-10=2$; whence $4x=12$, and $x=3$, which put down for a fifth equation, and the work is done; for x is now found equal to 3, and y equal to 2, and theſe numbers three and two being ſubſtituted for x and y reſpectively, will anſwer both the conditions of the queſtion, that is, you will have $4x-5y=12-10=2$, and $6x-7y=18-14=4$.

1ſt Equ.	$4x-5y=2.$
2d,	$6x-7y=4.$
3d,	$*+2y=4.$
4th,	$*\quad y=2.$
5th,	$x\quad *=3.$

The coefficients of x, the quantity to be exterminated in the two firſt equations, were 4 and 6: now, as theſe numbers admit of a common diviſor without any remainder, namely 2, divide them both by 2, and the quotients will be 2 and 3; uſe now theſe numbers 2 and 3 inſtead of 4 and 6, and the operation, as well as the equation reſulting from it, will

become more ſimple: for the firſt equation multiplied by 3 inſtead of 6, gives $12x-15y=6$; and the ſecond equation multiplied by 2 inſtead of 4, gives $12x-14y=8$; and the difference of theſe two equations is $y=2$.

Another way of exterminating the unknown quantity x is as follows: find out the value of x in reſpect of y, in the more ſimple of the two firſt equations; then, ſubſtituting this value inſtead of x in the other equation, you will have an equation, wherein y alone is concerned: thus in the foregoing example, the firſt equation was $4x-5y=2$, therefore $4x=5y+2$, and $x=\frac{5y+2}{4}$; ſubſtitute now this value $\left(\frac{5y+2}{4}\right)$ inſtead of x in the ſecond equation, $6x-7y=4$, by making $6x=\frac{30y+12}{4}$, and you will have this equation, $\frac{30y+12}{4}-7y=4$; therefore $30y+12-28y=16$; therefore $2y+12=16$; whence $2y=4$, and $y=2$; and x, or $\frac{5y+2}{4}=3$, as before.

N. B. 1*ſt*, What has here been ſaid concerning the extermination of the quantity x, may as well be applied to the other quantity y, except that its coefficients 5 and 7 will not admit of a common diviſor, as did the numbers 4 and 6.

2*dly*, Of the two different ways of extermination here laid down, ſometimes one will be found more expeditious, and ſometimes the other, as will appear by the following problems.

3*dly*, In the caſe of two unknown quantities, if the value of either of them can be had in integral terms in both equations, equate the two values one to the other, and you will have the other unknown quantity, by means whereof the firſt will alſo be known; and this makes a third way of extermination, whereof there

there are ſo many examples in the following problems, that nothing more needs here to be ſaid of it.

Whenever two quantities, as x and y, are multiplied together to produce a third, xy, the two multiplicants x and y are called factors, or efficients, in which caſe, each is ſaid to be the other's coefficient: thus, in the quantity xy, x is ſaid to be the coefficient of y, and y the coefficient of x; therefore, if in any quantity wherein x is concerned as an efficient, its coefficient be deſired; divide that quantity by x, and the quotient will be the coefficient: thus if the quantity $12x-yx$ be divided by x, the quotient is $12-y$; therefore in the quantity $12x-yx$, the coefficient of x is $12-y$.

Advertisement.

The reader muſt now no longer expect to have all ſimple equations reſolved to his hand, as hitherto has been done. If, after ſixteen examples of ſimple equations reſolved, and the ſolution of forty-four Algebraic problems, he be ſtill at a loſs how to reduce a ſimple equation, it muſt proceed from a weakneſs that either admits of no cure or deſerves none.

Problem 45.

71. *What two numbers are thoſe, the product of whoſe multiplication is* 144, *and the quotient of the greater divided by the leſs is* 16?

Solution.

Put x for the greater number, and y for the leſs; and the queſtion when abſtracted from words will ſtand thus: if $xy=144$, and $\frac{x}{y}=16$, what are x and y?

The firſt of theſe equations wants no preparation, and therefore may be put down thus;

Equ. 1ſt, xy *$=144$.

The

The ſecond equation, when prepared according to the laſt art. will ſtand thus;

Equ. 2d, $x-16y=0$.

Multiply the firſt equation by 1, the ſuppoſed coefficient of x in the ſecond, and the quotient not being altered by ſuch a multiplication, will be $xy^*=144$; multiply alſo the ſecond equation by y, which according to the foregoing art. is the coefficient of x in the firſt, and you will have $xy-16yy=0$; ſubtract this latter product from the former, and you will have, Equ. 3d, $^* 16yy=144$; whence

Equ. 4th, $^* y=3$.

Subſtitute now 3 inſtead of y, or $3x$ inſtead of xy in the firſt equation, and you will have $3x=144$, and conſequently,

Equ. 5th, $x \quad ^*=48$.

So that the numbers at laſt are found to be 48 and 3; and they will anſwer the conditions of the queſtion: for $48\times3=144$, and $\frac{48}{3}=16$.

Equ. 1ſt, $xy \quad ^* \quad =144$.
2d, $x- \quad 16y=0$.
3d, $^* \quad 16yy=144$.
4th, $^* \quad y=3$.
5th, $x \quad ^*=48$.

Another ſolution of the foregoing problem, from the laſt article.

Having found from the ſecond equation that $x=16y$; put $16y$ for x, or $16yy$ for xy in the firſt equation, and you will have $16yy=144$; whence y and x may be found as before.

Problem 46.

72. *It is required to find two numbers with the following properties, to wit, that the firſt with half the ſecond may make* 20; *and moreover, that the ſecond with a third part of the firſt may make* 20.

Solution.

SOLUTION.

Put x for the firſt number, and y for the ſecond, and the fundamental equations will be $x+\frac{y}{2}=20$, and $y+\frac{x}{3}=20$; which being prepared according to art. 70, will ſtand thus;

Equ. 1ſt, $2x+y=40$.
Equ. 2d, $x+3y=60$.

Subtract the firſt equation from twice the ſecond, and you will have

Equ. 3d, * $5y=80$; whence
Equ. 4th, * $y=16$.

Put 16 inſtead of y in the firſt equation, and you will have $2x+16=40$, whence

Equ. 5th, x *$=12$.

Therefore the numbers ſought are 12 and 16, and not 16 and 12, though 16 was found firſt; becauſe $x=12$ was put for the firſt number. That theſe numbers will anſwer the conditions of the queſtion is plain: for $12+\frac{16}{2}$ or $12+8=20$; and $16+\frac{12}{3}$, or $16+4=20$.

Another ſolution from art. 70.

Having found from the ſecond equation that $x=60-3y$, put $60-3y$ for x, or $120-6y$ for $2x$ in the firſt equation, and you will have $120-6y+y=40$; whence $y=16$, as before.

PROBLEM 47.

73. *One exchanges* 6 *French crowns and two French dollars for* 45 *ſhillings; and at another time* 9 *crowns and* 5 *dollars of the ſame coin for* 76 *ſhillings: I demand the diſtinct values of a crown and of a dollar.*

SOLUTION.

Put x and y for the number of ſhillings a crown and a dollar are reſpectively worth, and the equations will ſtand thus;

Equ.

Equ. 1ſt, $6x+2y=45$.
Equ. 2d, $9x+5y=76$.

Subtract 3 times the firſt equation from twice the ſecond, and you will have

Equ. 3d, * $4y=17$; whence
Equ. 4th, * $y=4\frac{1}{4}$ ſhillings;

that is, 4 ſhillings and 3 pence; put now $4\frac{1}{4}$ for y or $8\frac{1}{2}$ for $2y$ in the firſt equation, and you will have $6x+8\frac{1}{2}=45$, and $6x=36\frac{1}{2}$, and

Equ. 5th, x *$=6_{\frac{1}{12}}$;

that is, $6_{\frac{1}{12}}$ ſhillings, or 6 ſhillings and a penny; therefore the value of a crown was 6 ſhillings and a penny, and that of a dollar 4 ſhillings and 3 pence; and theſe values will anſwer the conditions of the queſtion; for, at this rate, 6 crowns will amount to 36 ſhillings and 6 pence, 2 dollars to 8 ſhillings and 6 pence, and the whole to 45 ſhillings; moreover, 9 crowns will amount to 54 ſhillings and 9 pence, 5 dollars to 21 ſhillings and 3 pence, and the whole ſum to 76 ſhillings.

Problem 48.

74. *It is required to find two ſuch numbers, that half the firſt together with a third part of the ſecond may make* 32; *and moreover, that a fourth part of the firſt together with a fifth part of the ſecond may make* 18.

Solution.

Put x and y for the two numbers, and the fundamental equations will be $\frac{x}{2}+\frac{y}{3}=32$, and $\frac{x}{4}+\frac{y}{5}=18$; which equations, when duly prepared, will ſtand thus; Equ. 1ſt, $3x+2y=192$.
Equ. 2d, $5x+4y=360$.

Subtract 5 times the firſt equation from 3 times the ſecond, and you have

Equ. 3d, * $2y=120$; whence
Equ. 4th, * $y=60$;

whence,

whence, and from the firſt equation, you will have $3x+2y$, or $3x+120=192$, which gives

Equ. 5th, $x=24$.

So the numbers are 24 and 60; and they will anſwer the conditions of the queſtion: $\frac{24}{2}+\frac{60}{3}$, that is, $12+20=32$; and moreover, $\frac{24}{4}+\frac{60}{5}$, that is, $6+12=18$.

Problem 49.

75. *Two perſons* A *and* B *were talking of their ages: ſays* A *to* B, *7 years ago I was juſt three times as old as you were, and 7 years hence I ſhall be juſt twice as old as you will be: I demand their preſent ages.*

Solution.

Let a and b repreſent the preſent ages of A and B reſpectively; then their ages 7 years ago were $a-7$ and $b-7$, and their ages 7 years hence will be $a+7$ and $b+7$; whence, and from the conditions of the problem, may be derived the two following fundamental equations:

$$a-7=\overline{b-7}\times 3=3b-21, \text{ and}$$

$$a+7=\overline{b+7}\times 2=2b+14.$$

From the former of theſe two equations, to wit, $a-7=3b-21$, we have $a=3b-14$; from the ſecond equation, to wit, $a+7=2b+14$, we have $a=2b+7$; therefore $3b-14=2b+7$, ſince both are equal to a; whence $b=21$, and $2b+7$, or $a=49$.

A therefore was 49 years old, and B 21 years old; which is true: for then, 7 years before, A's age would be 42, and B's 14; and 42 is three times 14: on the other hand, 7 years after, A's age would be 56, and B's 28; and 56 is twice 28.

Problem 50.

76. *A jockey has two horſes,* A *and* B, *whoſe values are ſought: he has alſo two ſaddles, one valued at* 12 *pounds, the other at* 2: *now if he ſets the better ſaddle*

ſaddle upon A, *and the worſe ſaddle upon* B, A *will then be worth twice as much as* B; *but on the other hand, if he ſets the better ſaddle upon* B, *and the worſe ſaddle upon* A, B *will then be worth three times as much as* A: *I demand the values of the horſes.*

SOLUTION.

Let a and b repreſent the prices of the two horſes A and B reſpectively in pounds; then if the better ſaddle be ſet upon A, and the worſe upon B, A will be worth $a+12$, and B will be worth $b+2$, and the firſt fundamental equation will be $a+12=\overline{b+2}\times 2=2b+4$; on the other hand, if the better ſaddle be ſet upon B, and the worſe upon A, then B will be worth $b+12$, and A will be worth $a+2$, and the ſecond fundamental equation will be $b+12=\overline{a+2}\times 3=3a+6$: in the firſt fundamental equation, where $a+12=2b+4$, we have $a=2b-8$; ſubſtitute therefore $2b-8$ inſtead of a, or rather $6b-24$ inſtead of $3a$, in the ſecond fundamental equation (which is $3a+6=b+12$), and you will have $6b-24+6$, that is, $6b-18=b+12$; whence $b=6$, and $2b-8$, or $a=4$: A then was valued at 4 pounds, and B at 6, and they will anſwer the conditions of the queſtion, as any one may eaſily try.

PROBLEM 51.

77. *There is a certain fraction, which if an unit be added to the numerator, will be equal to* $\frac{1}{3}$; *but if on the contrary an unit be added to the denominator, the fraction will then be equivalent to* $\frac{1}{4}$: *I demand the numerator and denominator of the fraction.*

SOLUTION.

Call the fraction $\frac{x}{y}$, and you will have theſe two fundamental equations, $\frac{x+1}{y}=\frac{1}{3}$, and $\frac{x}{y+1}=\frac{1}{4}$: the former

former of these equations, when reduced, gives $y=3x+3$, and the latter gives $y=4x-1$; therefore $4x-1=3x+3$, because both are equal to y; whence x the numerator of the fraction is 4; and $3x+3$, or y, the denominator is 15; and the fraction itself is, $\frac{4}{15}$; which if an unit be added to the numerator, will be $\frac{5}{15}$, or $\frac{1}{3}$; but if an unit be added to the denominator, it will be $\frac{4}{16}$, or $\frac{1}{4}$.

Problem 52.

78. *There is a certain fishing rod consisting of two parts, whereof the upper part is to the lower as* 5 *to* 7; *and moreover* 9 *times the upper part, together with* 13 *times the lower, is equal to* 11 *times the whole rod and* 36 *inches over: I demand the length of the two parts.*

Solution.

Put x for the length of the upper part in inches, and y for the lower; then will $x+y$ be the length of the whole rod, and since x is to y as 5 to 7 *ex hypothesi*, by multiplying extremes and means according to art. 15, you will have $7x=5y$ for a fundamental equation: again, as 9 times the upper part, together with 13 times the lower, is equal to 11 times the whole rod, and 36 inches over, you have $9x+13y=11x+11y+36$ for a second fundamental equation: the latter of these two equations gives $x=y-18$, and consequently $7x=7y-126$; substitute this value instead of $7x$, in the first fundamental equation, where $7x=5y$, and you will have $7y-126=5y$; whence $y=63$; and $y-18$, or $x=45$.

The upper part therefore was 45 inches, and the lower 63, as will appear upon trial.

Problem 53.

79. *One lays out* 2 *shillings and sixpence in apples and pears, buying his apples at four, and his pears at five a penny; and afterwards accommodates his neighbour with half his apples and one third part of his pears*

for thirteenpence, which was the price he bought them at: I demand how many he bought of each ſort.

SOLUTION.

Put x for the number of apples, and y for the number of pears; then if 4 apples coſt one penny, x will coſt $\frac{x}{4}$ pence; and for the ſame reaſon y will coſt $\frac{y}{5}$ pence, and you will have $\frac{x}{4}+\frac{y}{5}=30$ for a firſt fundamental equation: again, the price of $\frac{x}{2}$, half of his apples, will be $\frac{x}{8}$ and the price of $\frac{y}{3}$, a third part of his pears, will be $\frac{y}{15}$; and you will have $\frac{x}{8}+\frac{y}{15}=13$ for a ſecond fundamental equation. Hence,

Equ. 1ſt, $5x+4y=600$.
Equ. 2d, $15x+8y=1560$.

Subtract the ſecond equation from three times the firſt, according to art. 70, and you will have

Equ. 3d, * $4y=240$; whence
Equ. 4th, * $y=60$.

Subſtitute now 60 for y, that is, 240 for $4y$ in the firſt equation $5x+4y=600$, and you will have $5x+240=600$; whence

Equ. 5th, x *$=72$.

Therefore the number of apples was 72, and the number of pears 60, as will appear upon trial.

PROBLEM 57.

83. *A certain company at a tavern found, when they came to pay their reckoning, that if they had been three more in company to the ſame reckoning, they might have paid one ſhilling apiece leſs than they did; and that, had they been two fewer in company, they muſt have paid one ſhilling apiece more than they did; I demand the number of perſons, and their* quota.

SOLUTION.

SOLUTION.

Put x for the number of perſons, and y for the number of ſhillings every one actually paid; now if 4 perſons are to pay 5 ſhillings apiece, the whole reckoning muſt be 4×5 or 20 ſhillings; therefore if x perſons are to pay y ſhillings apiece, the whole reckoning muſt be $y \times x$ or xy ſhillings: this being laid down, ſuppoſe them now to be three more in company; then will the number of perſons be $x+3$; and to find what every particular perſon ought to pay in this caſe, the whole reckoning xy muſt be divided by $x+3$, the number of perſons, and the quotient $\frac{xy}{x+3}$ will be every one's particular reckoning; but according to the problem, every one's particular reckoning in this caſe would have been one ſhilling leſs than it actually was, that is, $y-1$; therefore $\frac{xy}{x+3} = y-1$; in like manner the ſecond condition of the problem furniſhes this equation, $\frac{xy}{x-2} = y+1$: the firſt of theſe equations, to wit, $\frac{xy}{x+3} = y-1$, being reduced, gives $x = 3y-3$; and the ſecond equation, to wit, $\frac{xy}{x-2} = y+1$ being reduced gives $x = 2y+2$; therefore $3y-3 = 2y+2$, and $y = 5$; whence $2y+2$, or $x = 12$.

So there were 12 perſons in company, their reckoning 5 ſhillings apiece, and their whole reckoning 3 pounds, or 60 ſhillings; which anſwers the conditions of the queſtion: for $\frac{60}{12+3} = 4$, and $\frac{60}{12-2} = 6$.

PROBLEM 61.

88. *What two numbers are thoſe, whoſe ſum is twice, and the product of whoſe multiplication is twelve times their difference?*

SOLUTION.

Put x for the greater number, and y for the leſs; then will their difference be $x-y$, their ſum $x+y$, and the product of their multiplication xy or yx; and the equations will be $x+y=2x-2y$, and $yx=12x-12y$; whence

Equ. 1ſt, $x-3y=0$.

Equ. 2d, $12x-yx-12y=0$,

Multiply the firſt equation by $12-y$, which, by art. 70, is the coefficient of x in the ſecond, and the product will be $12x-yx-36y+3yy=0$; ſubtract this equation from the ſecond, and you will have

Equ. 3d, $24y-3yy=0$; whence

Equ. 4th, $y=8$; and

Equ. 5th, $x=24$.

And the numbers 24 and 8 will anſwer the conditions.

Otherwiſe thus: by the firſt equation $x=3y$, and $4x=12y$; ſubſtitute $4x$ for $12y$ in the ſecond equation, and you will have $12x-yx-4x=0$; divide by x, and you will have $12-y-4=0$, and $y=8$, and x or $3y=24$, as before.

PROBLEM 62.

89. *What two numbers are thoſe, whoſe difference, ſum and product are to each other as are the numbers two, three and five reſpectively; that is, whoſe difference is to their ſum as two to three, and whoſe ſum is to their product as three to five?*

SOLUTION.

Put x for the greater number, and y for the leſs; then will their difference be $x-y$, their ſum $x+y$, and their product yx; and we ſhall have theſe two proportions productive of two equations, 1ſt, $x-y$ is to $x+y$ as 2 to 3, whence $3x-3y=2x+2y$; 2d, $x+y$ is to yx as 3 to 5, whence $3yx=5x+5y$: the reſolution follows;

Equ.

Equ. 1ſt, $x-5y=0$.

Equ. 2d, $3yx-5x-5y=0$.

Multiply the firſt equation by $3y-5$, the coefficient of x in the ſecond, and the product will be $3yx-5x-15yy+25y=0$; ſubtract this from the ſecond equation, and you will have,

Equ. 3d, $15yy-30y=0$; whence

Equ. 4th, $y=2$, and

Equ. 5th, $x=10$.

And the numbers 10 and 2 will anſwer the conditions of the problem.

Otherwiſe thus: by the firſt equation $x=5y$; ſubſtitute therefore x inſtead of $5y$ in the ſecond, and you will have $3yx-5x-x=0$; divide by x, and you will have $3y-5-1=0$, and $y=2$, as before.

Problem 63.

90. *It is required to find two numbers ſuch, that if their difference be multiplied into their ſum, the product will be five; but if the difference of their ſquares be multiplied into the ſum of their ſquares, the product will be ſixty-five.*

Solution.

Put x for the greater number, and y for the leſs; then will their difference be $x-y$, their ſum $x+y$, and the product of their ſum and difference multiplied together will be x^2-y^2, by art. 11; then will $x^2-y^2=5$ by the ſuppoſition, and $x^2=5+yy$; ſquare both ſides, and you will have $x^4=25+10y^2+y^4$: again, the difference of the ſquares of the two numbers ſought is x^2-y^2, and the ſum of their ſquares x^2+y^2, and the product of theſe two x^4-y^4; therefore $x^4-y^4=65$ by the ſuppoſition, and $x^4=65+y^4$; but x^4 was before found equal to $25+10y^2+y^4$; therefore $25+10y^2+y^4=65+y^4$; whence $y^2=4$, and $y=2$; ſubſtitute now 4 for y^2 in the firſt fundamental equation, which was $x^2-y^2=5$, and you will have $x^2-4=5$, and $x=3$; therefore the numbers ſought are 3 and 2, which will anſwer the conditions.

Problem 65.

93. *Three perſons*, A, B *and* C *were talking of their money; ſays* A *to* B *and* C, *Give me half of your money, and I ſhall have* d; *ſays* B *to* A *and* C, *Give me a third part of your money, and I ſhall have* d; *ſays* C *to* A *and* B, *Give me a fourth part of your money, and I ſhall have* d. *How much money had each?*

N. B. The letter *d* is here ſuppoſed to ſupply the place of ſome known quantity, which is left undetermined till the calculation is over.

Solution.

Let *a*, *b* and *c* repreſent the money of *A*, *B* and *C* reſpectively, and we ſhall have theſe three fundamental equations;

$$a+\frac{b+c}{2}=d;$$

$$b+\frac{a+c}{3}=d; \text{ and}$$

$$c+\frac{a+b}{4}=d.$$

Theſe equations, after due preparations according to art. 70, will ſtand thus;

Equ. 1ſt, $2a+b+c=2d.$
Equ. 2d, $a+3b+c=3d.$
Equ. 3d, $a+b+4c=4d.$

Subtract the firſt equation from twice the ſecond, and you will have

Equ. 4th, * $5b+c=4d.$

Subtract the third equation from the ſecond, and you will have

Equ. 5th, * $2b-3c=-d.$

Subtract five times the fifth equation from twice the fourth, and you will have

Equ. 6th, * * $17c=13d.$

Equ. 7th, * * $c=\frac{13d}{17}.$

Pu

Put this value for c in the fourth equation, and you will have $5b+c$, that is, $5b+\frac{13d}{17}=4d$; therefore $85b+13d=68d$, therefore $85b=55d$, and $b=\frac{55d}{85}=\frac{11d}{17}$; therefore

Equ. 8th, $*\ b\ *=\frac{11d}{17}$.

Put now the two values of b and c already found, inſtead of b and c in the firſt equation, and you will have $2a+b+c$, that is, $2a+\frac{11d+13d}{17}$, or $2a+\frac{24d}{17}=2d$; whence $34a+24d=34d$; and $34a=10d$, and $a=\frac{10d}{34}=\frac{5d}{17}$; therefore

Equ. 9th, $a\ *\ *=\frac{5d}{17}$.

So that the numbers are at laſt found to be $a=\frac{5d}{17}$, $b=\frac{11d}{17}$, and $c=\frac{13d}{17}$; whence it follows, that if any number be put for d, that will admit of the number 17 for a diviſor, the quantities a, b and c will come out in whole numbers: as if d be made equal to 17, the quantities a, b and c will be, 5, 11 and 13 reſpectively; and the numbers will anſwer the conditions of the problem; for $5+\frac{11+13}{2}$, or $5+12=17$; $11+\frac{5+13}{3}$, or $11+6=17$; $13+\frac{5+11}{4}$, or $13+4=17$.

Advertiſement. I hope the reader does not need to be told, that the numbers a, b and c muſt always be underſtood to be of the ſame denomination with the number d; as, if the number d ſignifies ſo many guineas,

the numbers a, b and c muſt alſo ſignify guineas; if ſhillings, ſhillings; if pence, pence;

Equ. 1ſt, $2a+b+c=2d$.	Equ. 6th, $**17c=13d$.
2d, $a+3b+c=3d$.	7th, $** c=\frac{13d}{17}$.
3d, $a+b+4c=4d$.	8th, $* b *=\frac{11d}{17}$.
4th, $* 5b+c=4d$.	9th, $a ** =\frac{5d}{17}$.
5th, $*2b-3c=-d$.	

A Scholium.

94. Of the foregoing equations, the firſt, ſecond and third, wherein the quantity a is concerned, may be called equations of the firſt rank; the fourth and fifth, wherein the quantity b is concerned, and out of which the quantity a is excluded, may be called equations of the ſecond rank; the ſixth, wherein c is concerned, and out of which both a and b are excluded, may be called an equation of the third rank; and ſo on, were there ever ſo many unknown quantities.

Whenever the equations of any particular rank are given or found, in order to derive from thence equations of an inferior rank, the Analyſt is at liberty to combine theſe firſt equations by pairs as he pleaſes, provided he does but obſerve theſe two things; firſt, that every equation of the given rank be ſome time or other coupled with ſome other equation of the ſame ſet, ſo as that no equation be left out of the account; ſecondly, that in every particular combination, one of the equations be ſuch as was never made uſe of in any combination before, and the other ſuch as hath been concerned in ſome combination before, excepting the firſt pair. It is not to be denied but that the artiſt may, if he pleaſes, vary ſometimes from this laſt precept; but if he always obſerves it, it will be altogether as well.

THE

THE

ELEMENTS OF ALGEBRA.

BOOK III.

Of the compoſition and reſolution of a ſquare raiſed from a binomial root.

101. HITHERTO we have been chiefly concerned in ſimple equations: it is now high time to apply ourſelves to the reſolution of quadratics; in order to which, ſomething muſt be ſaid concerning the nature of a binomial, upon which that reſolution entirely depends.

Now a binomial (at leaſt as it is here uſed) is a quantity conſiſting of two parts or members, connected together by the ſign + or —, as $x+a$, $x-a$, $x+\frac{b}{2}$, $x-\frac{b}{2}$; and a ſquare raiſed from a binomial root is nothing elſe but the ſquare of ſuch a quantity: thus the ſquare of $x+\frac{b}{2}$ is $xx+bx+\frac{bb}{4}$, and that of $x-\frac{b}{2}$ is $xx-bx+\frac{bb}{4}$.

$$\begin{array}{r} x+\frac{b}{2} \\ x+\frac{b}{2} \\ \hline x^2+\frac{bx}{2}+\frac{bb}{4} \\ +\frac{bx}{2} \\ \hline x^2+\frac{2bx}{2}+\frac{bb}{4} \end{array}$$

; that is, $x^2+bx+\frac{bb}{4}$

$$\begin{array}{r} x-\frac{b}{2} \\ x-\frac{b}{2} \\ \hline x^2-\frac{bx}{2}+\frac{bb}{4} \\ -\frac{bx}{2} \\ \hline x^2-\frac{2bx}{2}+\frac{bb}{4} \end{array}$$

; that is, $x^2-bx+\frac{bb}{4}$.

The difference betwixt theſe two ſquares ariſes from the different ſign of b; and that only affects the ſecond member; for the third member $\frac{bb}{4}$ will be the ſame, whether the quantity b be affirmative or negative; therefore, if thoſe caſes be thrown into one, it will ſtand thus: *The ſquare of* $x \pm \frac{b}{2}$ is $xx \pm bx+\frac{bb}{4}$; *to wit,* $+bx$ *when the root is* $x+\frac{b}{2}$, *and* $-bx$ *when the root is* $x-\frac{b}{2}$. Now of the three members that compoſe this ſquare, the firſt xx is the ſquare of x, the ſecond $\pm bx$ is the root of that ſquare multiplied into the coefficient $\pm b$; for the root of $x\,x$ is x, and $x \times \pm b = \pm bx$; the third and laſt member $\frac{bb}{4}$, is the ſquare of $\pm\frac{b}{2}$, that is, the ſquare of half the coefficient of the ſecond member; whence may be deduced the two following obſervations.

OBSERVATION

Observation 1.

Whenever we meet with a quantity consisting of two members, as $xx \pm bx$, *whereof one, as* xx, *is a square, and the other* $\pm bx$ *is the root of that square multiplied into some given coefficient* $\pm b$; *whenever I say we meet with such a quantity, it may be considered as an imperfect square raised from a binomial root, and may easily be compleated by adding* $\frac{bb}{4}$, *that is, by adding the square of half the coefficient of* x *in the second term:* thus $xx + 6x$ when compleated becomes $xx + 6x + 9$; $xx - 8x$ when compleated becomes $xx - 8x + 16$; $xx + 3x$ when compleated becomes $xx + 3x + \frac{9}{4}$; for here the coefficient being 3, its half will be $\frac{3}{2}$, and the square of this will be $\frac{9}{4}$: again, $xx + \frac{2x}{3}$ when compleated becomes $xx + \frac{2x}{3} + \frac{1}{9}$; for here the second term is $\frac{2x}{3}$, and therefore the coefficient of x is $\frac{2}{3}$ by art. 70; but the half of $\frac{2}{3}$ is $\frac{1}{3}$, and the square of this is $\frac{1}{9}$: again, $xx - \frac{5x}{6}$ when compleated becomes $xx - \frac{5x}{6} + \frac{25}{144}$; for here the coefficient is $-\frac{5}{6}$, whose half is $-\frac{5}{12}$, and the square of this is $+\frac{25}{144}$: lastly, $xx - \frac{bx}{a}$ when compleated becomes $xx - \frac{bx}{a} + \frac{bb}{4aa}$; for here the coefficient is $-\frac{b}{a}$, its half $-\frac{b}{2a}$, and the square of this is $\frac{bb}{4aa}$.

Observation

OBSERVATION 2.

In the ſecond place it may be obſerved, that the root of ſuch a ſquare when compleated, that is, the root of $xx \pm bx + \frac{bb}{4}$ *will always be* $x \pm \frac{b}{2}$ *that is, it will always be the ſquare root of the firſt member, together with half the coefficient, of the ſecond:* thus the ſquare root of $xx+6x+9$ will be $x+3$; that of $xx-8x+16$ will be $x-4$; that of $xx+3x+\frac{9}{4}$ will be $x+\frac{3}{2}$; that of $xx+\frac{2x}{3}+\frac{1}{9}$ will be $x+\frac{1}{3}$; that of $xx-\frac{5x}{6}+\frac{25}{144}$ will be $x-\frac{5}{12}$; and laſtly, that of $xx-\frac{bx}{a}+\frac{bb}{4aa}$ will be $x-\frac{b}{2a}$.

The common form to which all quadratic equations ought to be reduced in order to be reſolved.

102. Since an affected quadratic equation, as we have elſewhere defined it (art. 23,) is an equation conſiſting of three different ſorts of quantities; one ſort wherein the ſquare of the unknown quantity is concerned, another ſort wherein the unknown quantity is ſimply concerned, and a third ſort wherein it is not concerned at all; it follows, that all quadratic equations whatever may be reduced to this form, *viz.* $Axx = Bx + C$; wherein A, B and C denote known integral quantities whether affirmative or negative, and x the quantity unknown, the ſign $+$ on the latter ſide of the equation $Bx+C$, ſignifying no more than that the two quantities Bx and C are to be added together according to the common rules of addition, whether they be both affirmative or both negative, or one affirmative and the other negative: this will eaſily be allowed, if it be conſidered, that quadra-

tic equations, like all others, may be freed from fractions after the ſame manner as ſimple equations; and when that is done, there needs no more at moſt, than a bare tranſpoſition of the terms to reduce them to the form above deſcribed: we ſhall however give ſome examples of the reduction of quadratic equations to this form, amongſt thoſe that follow.

A general theorem for reſolving all quadratic equations.

103. This preparation being made, let now ſome general quadratic equation be propoſed to be reſolved, with which all particular equations may afterwards be compared, and by means whereof thoſe equations may be more readily reſolved; as for example, let the general equation in the laſt article be propoſed, to wit, $Axx=Bx+C$; and let it be propoſed to find the value or values of x in this equation; here, tranſpoſing Bx, I have $Axx-Bx=C$; and then dividing by A in order to free xx the higheſt power of x from its coefficient, I have $xx-\frac{Bx}{A}=\frac{C}{A}$; this done, I conſider the firſt ſide $xx-\frac{Bx}{A}$ as an imperfect ſquare raiſed from a binomial root; and accordingly I compleat that ſquare by art. 101, to wit, by adding $\frac{BB}{4AA}$, that is, by adding the ſquare of half the coefficient of the ſecond term; but if $\frac{BB}{4AA}$ muſt be added to the firſt ſide of the equation to compleat the ſquare, it muſt alſo be added to the other ſide to preſerve the equality; otherwiſe, by an unequal addition, the equation would be deſtroyed: this equal addition then being made, the equation will ſtand thus,

thus, $xx - \frac{Bx}{A} + \frac{BB}{4AA} = \frac{BB}{4AA} + \frac{C}{A}$; but the two fractions $\frac{BB}{4AA}$ and $\frac{C}{A}$, when thrown into one, give $\frac{ABB+4AAC}{4AAA}$, which, dividing by A, gives $\frac{BB+4AC}{4AA}$; therefore $xx - \frac{Bx}{A} + \frac{BB}{4AA} = \frac{BB+4AC}{4AA}$; therefore the ſquare root of one ſide will be equal to the ſquare root of the other; but the ſquare root of the fraction $\frac{BB+4AC}{4AA}$, at leaſt as it here ſtands in letters, cannot be extracted, becauſe, though the denominator $4AA$ be a ſquare, yet there is no literal quantity whatever which being multiplied into itſelf will produce $BB+4AC$; therefore, to put this numerator into the form of a ſquare, let us ſuppoſe $BB+4AC=ss$; and then the equation will ſtand thus, $xx - \frac{Bx}{A} + \frac{BB}{4AA} = \frac{ss}{4AA}$; but the ſquare root of $xx - \frac{Bx}{A} + \frac{BB}{4AA}$ is $x - \frac{B}{2A}$, by art. 101; and the ſquare root of $\frac{ss}{4AA}$ is $\pm\frac{s}{2A}$ for a reaſon formerly given, to wit, becauſe $\frac{-s}{2A}$ when multiplied into itſelf will produce $\frac{+ss}{4AA}$ as well as $\frac{+s}{2A}$; and therefore, by the very definition of the ſquare root, the former quantity has as good a right to be ſtiled the ſquare root of $\frac{ss}{4AA}$ as the latter; therefore this equation will now be reduced to a ſimple one, and will

will ſtand thus, $x - \frac{B}{2A} = \pm \frac{s}{2A}$; therefore $x = \frac{B \pm s}{2A}$, that is, $x = \frac{B+s}{2A}$, and $x = \frac{B-s}{2A}$. *Q. E. I.*

Thus we ſee that every quadratic equation neceſſarily admits of two numbers or roots (as they are called) which will equally anſwer the condition of the equation, that is, either of which being put equal to x, will make the two ſides of the equation equal one to the other; and theſe two roots, in all arts and ſciences where quadratic equations are concerned, are of equal eſtimation, whether they be affirmative or negative, or one be affirmative and the other negative: as for example, in Geometry, if a line drawn from any point towards the right hand be conſidered as affirmative, a line drawn from the ſame point to the left hand ought to be conſidered as negative; for let AB be any line drawn from the fixt point A to the point B on the right hand, and then imagine the point B to move towards A; here then it is plain that the nearer B approaches towards A, the leſs will be the affirmative line AB; when the point B coincides with A, the line AB muſt be looked upon as nothing, and therefore, when the point B by a continuation of its motion has paſſed through A, ſo as to lie on the left hand of A, the line AB ought now to be looked upon as negative, having paſſed from ſomething through nothing into negation; and yet a line of this negative kind is as true a line as any of the affirmative kind; and therefore the negative roots of quadratic equations, which exhibit negative lines, ought to be of equal eſtimation with the affirmative roots that exhibit affirmative lines; and the ſame will be the caſe (I ſay) of all other arts and ſciences where quadratic equations are concerned: but in common life, where negative quantities have no place, the affirmative roots of quadratic equations are only allowed of in the reſolution

lution of problems, the negative ones being for the moſt part excluded.

N. B. 1ſt, The root of any quantity whether in numbers or letters, that cannot be expreſſed, is called a ſurd: thus $\sqrt{3}$ is a ſurd, and ſo alſo is $\sqrt{BB+4AC}$; and it was for this reaſon, that I made $\sqrt{BB+4AC}=s$, or, which is all one, $BB+4AC=ss$.

2dly, The quantity C and conſequently $4AC$ will ſometimes be negative; in which caſe the quantity ss, or $BB+4AC$ muſt be looked upon as the ſum of the affirmative quantity BB and the negative one $4AC$ when added together according to the common rules of addition.

3dly, In many of the following examples, the learner muſt be very careful to form a right eſtimation of negative quantities: thus for inſtance, if x, that is, $+x=-3$, he muſt make $4x$, or $+4\times-3=-12$; but he muſt make $-4x$, or $-4\times-3=+12$; ſo likewiſe $-x$, or $-1x$, or -1×-3 muſt be made equal to $+3$, *&c.*

Aſynthetical demonſtration of the foregoing theorem.

104. In the laſt article it was demonſtrated analytically, that if Axx be equal to $Bx+C$, then x muſt neceſſarily be equal both to $\frac{B+s}{2A}$, and to $\frac{B-s}{2A}$, ſuppoſing ss to be equal to $BB+4AC$. Now it may not be improbable but that the learner, eſpecially if he has any taſte or genius, may have a curioſity to ſee the ſame demonſtrated again ſynthetically, that is, to ſee it demonſtrated, that if x be made equal to $\frac{B+s}{2A}$, or $\frac{B-s}{2A}$, then Axx muſt neceſſarily be equal to $Bx+C$: it is therefore to gratify the learner in this particular, that I have added the following demonſtration.

CASE

CASE 1st.

Let $x = \frac{B+s}{2A}$; then you will have $xx = \frac{BB+2Bs+ss}{4AA}$; multiply both sides by A, and you will have Axx (or one side of the general equation) equal to $\frac{BB+2Bs+ss}{4A}$; for a fraction may be multiplied by dividing the denominator, as well as by multiplying the numerator: again, since $x = \frac{B+s}{2A}$, you will have $Bx = \frac{BB+Bs}{2A}$; double both the numerator and denominator of this last fraction, which will not affect the value of the fraction, and you will have $Bx = \frac{2BB+2Bs}{4A}$; therefore $Bx+C = \frac{2BB+2Bs}{4A} + \frac{C}{1} = \frac{2BB+2Bs+4AC}{4A} = \frac{BB+2Bs+BB+4AC}{4A} = \frac{BB+2Bs+ss}{4A}$, because $BB+4AC=ss$ by the supposition; therefore $Axx=Bx+C$, since each side is equal to the same quantity $\frac{BB+2Bs+ss}{4A}$.

CASE 2d.

Let now $x = \frac{B-s}{2A}$, and you will have $xx = \frac{BB-2Bs+ss}{4AA}$, and Axx (or the first side of the general equation) $= \frac{BB-2Bs+ss}{4A}$: again, $Bx = \frac{BB-Bs}{2A} = \frac{2BB-2Bs}{4A}$;

$\frac{2BB-2Bs}{4A}$; therefore $Bx+C=\frac{2BB-2Bs+4AC}{4A}=\frac{BB-2Bs+ss}{4A}$; therefore $Axx=Bx+C$, becauſe each ſide is equal to the ſame quantity $\frac{BB-2Bs+ss}{4A}$.

Various examples of the reſolution of affected quadratic equations, both with and without the general theorem.

EXAMPLE I.

105. Let the equation propoſed to be reſolved be $6xx=5x-1$. This particular equation, as well as all thoſe that follow, may be reſolved after the ſame manner as the general one in art. 103: but as theſe reſolutions are very often attended with fractions very troubleſome to the young Analyſt, and as theſe particular equations are nothing elſe but particular caſes of the general one, it follows, that the reſolution of theſe equations muſt neceſſarily be included in the reſolution of the general one; and conſequently, that theſe equations will be much more eaſily and readily reſolved by referring them to the general one: however, for the ſatisfaction of the learner, I ſhall reſolve ſome of theſe equations both with and without the general theorem: and firſt I ſhall reſolve the equation propoſed by the help of the general theorem thus; in the general equation, art. 103, we have $Axx=Bx+C$; in the particular one already propoſed, we have $6xx=5x-1$; therefore A in the general equation anſwers to 6 in the particular one, B anſwers to 5, and C to -1; therefore, if the particular equation be referred to the general one, its reſolution will be as follows: $A=6, B=5, C=-1, BB=25, 4AC=-24$; therefore ss, or $BB+4AC$, will be the ſum of 25 and

$-24=1$; therefore $s=1$, $\frac{B+s}{2A}=\frac{5+1}{12}=\frac{1}{2}$, $\frac{B-s}{2A}=\frac{5-1}{12}=\frac{1}{3}$; therefore the two roots of this equation $6xx=5x-1$ are $\frac{1}{2}$ and $\frac{1}{3}$. The reſolution of this equation in numbers, without the general theorem, is as follows: Equation, $6xx=5x-1$; therefore $6xx-5x=-1$, and $xx-\frac{5x}{6}=-\frac{1}{6}$; where $xx-\frac{5x}{6}$ may be conſidered as the two firſt members of a ſquare raiſed from a binomial root; the coefficient of the ſecond term is $\frac{-5}{6}$, its half $\frac{-5}{12}$, and the ſquare of this $\frac{+25}{12\times12}$, which expreſſion I chooſe to make uſe of rather than $\frac{+25}{144}$ for a reaſon that will preſently be ſeen; add now $\frac{25}{12\times12}$ to both ſides, that is, to one ſide to compleat the ſquare, and to the other to preſerve the equality, and you will have $xx-\frac{5x}{6}+\frac{25}{12\times12}=\frac{-1}{6}+\frac{25}{12\times12}$; here now it is certain that the fractions $\frac{-1}{6}$ and $\frac{+25}{12\times12}$ muſt be reduced to the ſame denomination in order to be added together into one ſum; but if this be done the common way, it will be impoſſible to obtain the ſquare root of that ſum without a further reduction; therefore, to avoid this, I enquire what number the denominator 6 muſt be multiplied by to make it 12×12 the ſame with the other denominator, and the anſwer in this caſe, as well as in all others of this kind, will be very eaſy; for $2\times6=12$, and therefore $12\times2\times6$, or $24\times6=12\times12$; therefore I multiply both the numerator and denomi-

nator of the fraction $\frac{-1}{6}$ into 24, and ſo have $\frac{-24}{12\times12}$; and this added to the other fraction $\frac{+25}{12\times12}$ gives $\frac{+1}{12\times12}$; and now the equation will be $xx-\frac{5x}{6}+\frac{25}{12\times12}=\frac{1}{12\times12}$; extract the root of both ſides, and you will have $x-\frac{5}{12}=\pm\frac{1}{12}$, whence $x=\frac{5\pm1}{12}$; but $\frac{5+1}{12}=\frac{1}{2}$, and $\frac{5-1}{12}=\frac{1}{3}$; therefore $x=\frac{1}{2}$, or $\frac{1}{3}$.

This may alſo be proved ſynthetically thus: let $x=\frac{1}{2}$, then you will have $xx=\frac{1}{4}$, and $6xx=\frac{6}{4}$, or $1\frac{1}{2}$: again, $5x=\frac{5}{2}=2\frac{1}{2}$; therefore $5x-1=1\frac{1}{2}$; therefore $6xx=5x-1$, ſince each equals $1\frac{1}{2}$.

Let us now ſuppoſe $x=\frac{1}{3}$, and you will have $xx=\frac{1}{9}$, and $6xx=\frac{6}{9}$, or $\frac{2}{3}$: on the other hand you will have $5x=\frac{5}{3}$ or $1\frac{2}{3}$; therefore $5x-1=\frac{2}{3}$; therefore $6xx=5x-1$: theſe two fractions therefore will anſwer the condition of the equation; and there are no other numbers beſide theſe, whether whole numbers or fractions, that will do it.

Example 2.

Let the equation to be reſolved be $24x-2xx=xx+45$. Here tranſpoſing $-2xx$ we have $3xx+45=24x$, whence $3xx=24x-45$; and thus we have reduced the equation propoſed to the form of the general one in art. 102; wherefore applying that general equation to this particular one, the reſolution, by art. 103, will be as follows: $A=3$, $B=24$, $C=-45$, $BB=576$, $4AC=-540$, $ss=576-540=36$, $s=6$, $\frac{B+s}{2A}=5$, $\frac{B-s}{2A}=3$; therefore $x=5$, or 3; and this will further eaſily appear by ſubſtituting 5 or 3 for x in

in the original equation thus; $x=5$; therefore $24x=120$; $xx=25$; therefore $24x-2xx=120-50=70$, which is one ſide of the equation: on the other ſide we have $xx+45=25+45=70$; therefore $24x-2xx=xx+45$. Again, let $x=3$, then we ſhall have $24x=72$, and $xx=9$, and $24x-2xx=54$: on the other hand, $xx+45=54$; therefore $24x-2xx=xx+45$.

N. B. This laſt equation when reduced to the form of the general one in art. 102, ſtood thus; $3xx=24x-45$: but this equation might have been reduced to a more ſimple one of the ſame form by dividing the whole by 3, and then the equation would have ſtood thus, $xx=8x-15$: in which caſe we ſhould have had $A=1$, $B=8$, $C=-15$, $BB=64$, $4AC=-60$, $ss=4$, $s=2$, $\frac{B+s}{2A}=5$, $\frac{B-s}{2A}=3$, as before: the ſolution of the foregoing equation in the common way is this, $xx-8x=-15$; therefore compleating the ſquare, $xx-8x+16=1$; therefore extracting the ſquare root, $x-4=\pm 1$; therefore $x=+4\pm 1=5$, or 3.

Example 3.

Let the equation to be reſolved be $72x-2xx+144=3xx-8x+444$. Hence by tranſpoſitions we have $72x+144=5xx-8x+444$, and $80x+144=5xx+444$, and $5xx=80x-300$, and $xx=16x-60$; which equation being reſolved like that in the laſt example, gives $x=10$, or 6; which may alſo be eaſily ſeen by ſubſtituting 10 or 6 for x in the original equation.

Example 4.

Let the equation to be reſolved be $28x-xx=115$. Here we have $xx+115=28x$, and $xx=28x-115$; which equaton being reſolved like that in the ſecond example, gives $x=23$, or 5; the proof whereof is eaſy.

EXAMPLE 5.

Let the equation to be resolved be $\frac{120}{x} - 5 = \frac{120}{x+4}$; therefore $120 - 5x = \frac{120x}{x+4}$; therefore $100x - 5xx + 480 = 120x$; therefore $5xx + 120x = 100x + 480$; therefore $5xx = -20x + 480$; therefore (dividing by 5) $xx = -4x + 96$; therefore in this case, $A = 1$, $B = -4$, $C = 96$, $BB = 16$, $4AC = 384$, $ss = 16 + 384 = 400$, $s = 20$, $\frac{B+s}{2A} = \frac{-4+20}{2} = 8$, $\frac{B-s}{2A} = \frac{-4-20}{2} = -12$; therefore in this equation, $x = 8$, or -12: the proof is thus; let $x = +8$; then $\frac{120}{x} = 15$, and $\frac{120}{x} - 5 = 10$: again, $x + 4 = 12$, and $\frac{120}{x+4} = 10$; therefore $\frac{120}{x} - 5 = \frac{120}{x+4}$. Again, let $x = -12$, then $\frac{120}{x} = -10$; therefore, $\frac{120}{x} - 5 = -10 - 5 = -15$: on the other hand, $x + 4 = -12 + 4 = -8$; therefore $\frac{120}{x+4} = \frac{120}{-8} = -15$; therefore $\frac{120}{x} - 5 = \frac{120}{x+4}$. The resolution in the common way is this; $xx = -4x + 96$; therefore $xx + 4x = 96$; therefore $xx + 4x + 4 = 100$; therefore $x + 2 = \pm 10$; therefore $x = -2 \pm 10 = +8$, or -12.

EXAMPLE 6.

Let the equation to be resolved be $2xx + 3x = 65$; therefore $2xx = -3x + 65$; therefore in this case, $A = 2$, $B = -3$, $C = 65$, $BB = 9$, $4AC = 520$, $ss = 529$, $s = 23$, $\frac{B+s}{2A} = \frac{-3+23}{4} = 5$, $\frac{B-s}{2A} = \frac{-3-23}{4} = -$

$-6\frac{1}{2}$: therefore in this equation, $x=+5$, or $-6\frac{1}{2}$: that $x=+5$ will eaſily be ſeen; and that $x=-6\frac{1}{2}$: or that $-6\frac{1}{2}$ being ſubſtituted for x will make $2xx+3x=65$, I thus demonſtrate: $x=-6\frac{1}{2}=\frac{-13}{2}$; therefore $xx=\frac{+169}{4}$; therefore $2xx=\frac{169}{2}$; and $+3x=+3\times\frac{-13}{2}=\frac{-39}{2}$: therefore $2xx+3x=\frac{169-39}{2}=\frac{130}{2}=65$. The reſolution in numbers; $2xx+3x=65$: therefore $xx+\frac{3x}{2}+\frac{9}{4\times4}=\frac{65}{2}+\frac{9}{4\times4}=\frac{520+9}{4\times4}=\frac{529}{4\times4}$; therefore $x+\frac{3}{4}=\pm\frac{23}{4}$; therefore $x=\frac{-3\pm23}{4}=+5$, or $-6\frac{1}{2}$.

Example 7.

Let the equation to be reſolved be $9xx-x=140$; therefore $9xx=1x+140$. Here $A=9$, $B=1$, $C=140$, $BB=1$, $4AC=5040$, $ss=5041$, $s=71$, $\frac{B+s}{2A}=4$, $\frac{B-s}{2A}=-3\frac{8}{9}$; therefore $x=+4$, or $-3\frac{8}{9}$: the latter caſe I thus demonſtrate; $x=-3\frac{8}{9}=\frac{-35}{9}$; therefore $xx=\frac{+1225}{81}$; therefore $9xx=\frac{1225}{9}$: again, $-1x$, that is, $-1\times\frac{-35}{9}=\frac{+35}{9}$, therefore $9xx-x=\frac{1225+35}{9}=\frac{1260}{9}=140$. In numbers thus;

$9xx-1x=140$; therefore $xx-\frac{1x}{9}=\frac{140}{9}$; therefore $xx-\frac{1x}{9}+\frac{1}{18\times18}=\frac{140}{9}+\frac{1}{18\times18}=\frac{5040+1}{18\times18}=\frac{5041}{18\times18}$; extract the root of both sides, that is, of $xx-\frac{1x}{9}+\frac{1}{18\times18}$ on one side, and of $\frac{5041}{18\times18}$ on the other, and you will have $x-\frac{1}{18}=\pm\frac{71}{18}$; whence $x=+4$, or $-3\frac{5}{9}$.

Example 8.

Let the equation to be resolved be $\frac{45}{2x+3}+\frac{116}{4x+5}=7$; therefore $45+\frac{232x+348}{4x+5}=14x+21$; therefore $180x+225+232x+348=56xx+154x+105$; that is, $412x+573=56xx+154x+105$; therefore $258x+573=56xx+105$; therefore $56xx=258x+468$; therefore (dividing by 2) you have $28xx=129x+234$; which equation being compared with the general one exhibited in art. 103. gives $A=28$, $B=129$, $C=234$, $BB=16641$, $4AC=26208$, $ss=42849$, $s=207$, $\frac{B+s}{2A}=6$, $\frac{B-s}{2A}=-1\frac{11}{28}$; therefore in this equation $x=+6$, or $-1\frac{11}{28}$; both which I thus demonstrate: first $x=6$; therefore $2x+3=15$; therefore $\frac{45}{2x+3}=3$; moreover, $4x+5=29$; therefore $\frac{116}{4x+5}=4$; therefore $\frac{45}{2x+3}+\frac{116}{4x+5}=3+4=7$;

$=7$: secondly, $x = -1\frac{11}{28} = -\frac{39}{28}$; therefore $2x = \frac{-39}{14}$; therefore $2x+3 = \frac{-39}{14} + \frac{3}{1} = \frac{3}{14}$; therefore $\frac{45}{2x+3}$ is the quotient of $\frac{45}{1}$ divided by $\frac{3}{14}$; but this quotient, according to the rules of fractional diviſion, is $\frac{630}{3} = 210$; therefore $\frac{45}{2x+3} = 210$: again, $4x = \frac{-39}{7}$; therefore $4x+5 = \frac{-39}{7} + \frac{5}{1} = \frac{-4}{7}$; therefore $\frac{116}{4x+5}$ is the quotient of $\frac{116}{1}$ divided by $\frac{-4}{7}$; but this quotient is $\frac{-812}{4}$, or -203; therefore $\frac{116}{4x+5} = -203$; therefore $\frac{45}{2x+3} + \frac{116}{4x+5} = 210 - 203 = 7$.

The reſolution of this equation in the common way is as follows; $56xx - 258x = 468$; therefore $xx - \frac{258x}{56} = \frac{468}{56}$: here the coefficient of the ſecond term is $-\frac{258}{56}$, its half $-\frac{129}{56}$, and the ſquare of this $\frac{16641}{56\times56}$; add this ſquare to both ſides, and you will have $xx - \frac{258x}{56} + \frac{16641}{56\times56} = \frac{468}{56} + \frac{16641}{56\times56} = \frac{26208+16641}{56\times56} = \frac{42849}{56\times56}$; extract the ſquare root of both ſides, that is, of $xx - \frac{258x}{56} + \frac{16641}{56\times56}$

on one side, and of $\frac{42849}{56\times56}$ on the other, and you will have $x-\frac{129}{56}=\pm\frac{207}{56}$; whence $x=+6$, or $+1\frac{11}{28}$.

Example 9.

Let the equation be $15x-xx=56$; then this equation being resolved by the general theorem gives $x=8$, or 7; and in the common way it is thus resolved; $15x-xx=56$; change all the signs to make xx affirmative, and you will have $xx-15x=-56$; whence $xx-15x+\frac{225}{4}=-56+\frac{225}{4}=\frac{1}{4}$; therefore $x-\frac{15}{2}=\pm\frac{1}{2}$, and $x=8$, or 7; but what I chiefly intend by this example is, to shew, that in resolving a quadratic equation by the general theorem there is no necessity of making any transposition to exhibit xx affirmative when it would otherwise have been negative; as for instance, in the equation here proposed we had $15x-xx=56$; transpose $15x$, and you will have $-xx$, that is, $-1xx=-15x+56$; let this equation be referred to the general one in art. 102, and resolved by the general theorem in art. 103, and you will have $A=-1$, $B=-15$, $C=56$, $BB=225$, $4AC=-224$, $ss=1$, $s=1$ $\frac{B+s}{2A}=\frac{-15+1}{-2}=\frac{-14}{-2}$ $=+7$, $\frac{B-s}{2A}=\frac{-15-1}{-2}=+8$.

How the learner is to proceed when the roots of a quadratic equation are inexpressible.

106. As there are but few square numbers in comparison of the rest, and as all quadratic equations are

are reſolved by extracting the ſquare root, it follows, that there are but few quadratic equations capable of an exact numeral ſolution in compariſon of thoſe that are not: but as the ſquare root may be extracted to any degree of exactneſs we pleaſe, the reſolution of a quadratic equation, which depends upon it, may alſo be performed to any degree of accuracy whatever; as will appear by the following example.

Example 10.

Let the equation be $xx-4x+1=0$, or $xx=4x-1$. Here $A=1$, $B=4$, $C=-1$, $BB=16$, $4AC=-4$, $ss=12$, $s=\sqrt{12}$, $\frac{B+s}{2A}=\frac{4+\sqrt{12}}{2}$, and $\frac{B-s}{2A}=\frac{4-\sqrt{12}}{2}$; therefore $x=\frac{4+\sqrt{12}}{2}$, or $\frac{4-\sqrt{12}}{2}$: but let us enquire in the next place, whethere theſe two fractions are not capable of being reduced to more ſimple terms; firſt then it is plain that $\frac{4}{2}=2$, and I ſay further that $\frac{\sqrt{12}}{2}=\sqrt{3}$; for $12=3\times4$; therefore $\sqrt{12}=\sqrt{3}\times\sqrt{4}=\sqrt{3}\times2$; therefore $\frac{\sqrt{12}}{2}=\sqrt{3}$; whence it follows, that $x=2+\sqrt{3}$, or $2-\sqrt{3}$; but $\sqrt{3}$ extracted to three decimal places gives 1.732: therefore $2+\sqrt{3}=3.732$, and $2-\sqrt{3}=.268$; therefore $x=$ (nearly) 3.732, or .268, as will be further evident from the proof following: firſt $x=3.732$; therefore $xx=13.927824$; and $4x=14.928$; therefore $4x-xx=1.000176$; therefore $xx-4x=-1.000176$; therefore $xx-4x+1=-.000176=0$ very nearly; ſecondly, let $x=.268$ and you will have $xx=.071824$ and $4x=1.072$, and $4x-xx=1.000176$; therefore $xx-4x=-1.000176$; therefore $xx-4x+1=-.000176=0$ very nearly; therefore

therefore in both caſes, the condition of the equation is anſwered to as many figures or cyphers, as is equal to the number of decimal places to which the ſquare root of 3 was extracted.

It may ſeem to ſome perhaps a paradox to aſſert, that though the two ſurd values of the unknown quantity found in this and the like caſes, are not to be expreſſed in numbers, yet they may be demonſtrated to be juſt: Thus I ſhall demonſtrate, that if either of the two values of x found in the laſt caſe, to wit, $2+\sqrt{3}$, or $2-\sqrt{3}$, be ſubſtituted for x, we ſhall have this equation $xx-4x+1=0$, which was the equation there propoſed: in order to this, make $\sqrt{3}=s$; and firſt, let $x=2+\sqrt{3}$, or $2+s$; and we ſhall have $xx=4+4s+ss$, and $-4x=-8-4s$; and $xx-4x=4+4s+ss-8-4s=ss-4$; but if $s=\sqrt{3}$, $ss=3$, and $ss-4=-1$; therefore, $xx-4x=-1$, and $xx-4x+1=0$: ſecondly, let $x=2-\sqrt{3}$, or $2-s$, and we ſhall have $xx=4-4s+ss$, and $-4x=-8+4s$, and $xx-4x=ss-4=-1$, as before; whence $xx-4x+1=0$.

Of impoſſible roots in a quadratic equation, and whence they ariſe.

107. The roots of quadratic equations are not only very often inexpreſſible, but ſometimes even impoſſible, as will appear by the following example.

Example II.

Let the equation be $xx-4x+6=0$, or $xx=4x-6$. Here $A=1$, $B=4$, $C=-6$, $BB=16$, $4AC=-24$, $ss=-8$, $s=\sqrt{-8}$, $\frac{B+s}{2A}=\frac{4+\sqrt{-8}}{2}$, $\frac{B-s}{2A}=\frac{4-\sqrt{-8}}{2}$; but $\frac{4}{2}=2$, and $-8=-2\times+4$; there-

fore

fore $\sqrt{-8} = \sqrt{-2} \times \sqrt{+4} = \sqrt{-2} \times 2$; therefore $\frac{\sqrt{-8}}{2} = \sqrt{-2}$; therefore in this equation, $x = 2 + \sqrt{-2}$, or $2 - \sqrt{-2}$; but as no quantity whatever, either affirmative or negative, being multiplied into itself, will produce a negative, it follows, that $\sqrt{-2}$ is not only an inexpreſſible quantity, but alſo an impoſſible one; and conſequently, that the two values of x in this equation $2 + \sqrt{-2}$ and $2 - \sqrt{-2}$ will both be impoſſible.

N. B. Though the roots of this laſt equation be impoſſible in their own natures, yet they may be abſtractedly demonſtrated to be juſt, as in the laſt article, by making $s = \sqrt{-2}$, and conſequently $ss = -2$.

From what has been ſaid concerning impoſſible roots, it appears that one root of a quadratic equation can never be impoſſible alone, but that they muſt either be both poſſible or both impoſſible: for it appears from the reſolution of the laſt equation, that the impoſſibility of the roots flows from the impoſſibility of the quantity s, or of the ſquare root of ss when it is negative; now when s is poſſible, both the roots of the equation $\frac{B+s}{2A}$ and $\frac{B-s}{2A}$ will be poſſible; on the other hand, when s is impoſſible, both the roots muſt neceſſarily be impoſſible.

Since the poſſibility or impoſſibility of the two roots of a quadratic equation depends upon the quantity ss being affirmative or negative, it follows, that when ss and conſequently s equals nothing, the roots will be in the limit between poſſible and impoſſible: now if $s = 0$, we ſhall have $\frac{B+s}{2A} = \frac{B}{2A}$, and $\frac{B-s}{2A} = \frac{B}{2A}$; therefore the two unequal roots of a quadratic equation grow nearer and nearer to a ſtate of equality as they grow nearer and nearer to a ſtate of impoſſibility,

but do not come to be equal till they come to the limit between poſſibility and impoſſibility.

How to find the ſum and product of two roots of a quadratic equation without reſolving it: alſo how to generate a quadratic equation that ſhall have any two given numbers whatever for its roots.

108. *In a quadratic equation of this general form, to wit,* $Axx = Bx + C$, *the ſum of the roots will always be* $\frac{B}{A}$, *and the product of their multiplication* $\frac{-C}{A}$: for the roots of ſuch an equation were $\frac{B+s}{2A}$ and $\frac{B-s}{2A}$ the ſum whereof is $\frac{2B}{2A}$, or $\frac{B}{A}$; and if theſe two roots be multiplied together, their product will amount to $\frac{BB-ss}{4AA}$; but $ss = BB + 4AC$ as was formerly ſuppoſed, art. 103; therefore $ss - BB = 4AC$, and $BB - ss = -4AC$; therefore $\frac{BB-ss}{4AA}$, or the product of the two roots, equals $\frac{-4AC}{4AA} = \frac{-C}{A}$.

Therefore if $A = 1$, that is, if the equation be $xx = Bx + C$, the ſum of the roots will be B, and their product $-C$; that is, as the equation now ſtands, the ſum of the roots will be the coefficient of the unknown quantity on the ſecond ſide of the equation, and their product, what we call the abſolute term, with its ſign changed.

Hence we have an eaſy way to form a quadratic equation whoſe roots ſhall be any two given numbers whatever: as for inſtance, ſuppoſe I would have a quadratic equation whoſe roots ſhall be the two numbers 3 and

4;

4; here it is plain that the ſum of the two numbers 3 and 4 is 7, and that the product of their multiplication is 12; therefore I form an equation whereof one ſide is xx, and the other ſide is $7x-12$, to wit, $xx=7x-12$; and the roots of this equation will be the given numbers 3 and 4, as will appear from the reſolution: if I intend the two roots to be 3 and -4, their ſum will be -1, and the product of their multiplication -12, and the equation $xx=-x+12$: if the roots are to be -3 and $+4$, their ſum will be $+1$, the product of their multiplication -12, and the equation $xx=x+12$: laſtly, if the roots are to be -3 and -4, their ſum will be -7, the product of their multiplication $+12$, and the equation $xx=-7x-12$. I ſhall demonſtrate one general caſe according to the reſolution given in art. 103, which will be ſufficient to ſhew the way to all the reſt: let then the roots propoſed be p and q, whoſe ſum is $p+q$, and the product of whoſe multiplication is pq; and the equation will be $xx=\overline{p+q}\times x-pq$; now if this equation be referred to the general one, we ſhall have $A=1, B=\overline{p+q}, C=-pq, BB=pp+2pq+qq, 4AC=-4pq, ss=pp-2pq+qq, s=p-q, \frac{B+s}{2A}=\frac{p+q+p-q}{2}=\frac{2p}{2}=p, \frac{B-s}{2A}=\frac{p+q-p+q}{2}=\frac{2q}{2}=q$; therefore the two roots of this equation are p and q. *Q. E. D.*

I think I ought not to omit here, that if any one has a mind to form a quadratic equation with any two given impoſſible roots whatever (if I may be allowed the expreſſion), it may be done by the foregoing rule, provided that theſe impoſſible roots be in ſuch a form as is proper for a quadratic equation: as for example, ſuppoſe I would form a quadratic equation with theſe two impoſſible roots, to wit, $2+\sqrt{-3}$ and $2-\sqrt{-3}$, I put ss for -3; for though no poſſible quantity multiplied into itſelf can produce

a negative, yet an impoſſible one may, that being the very thing wherein the impoſſibility conſiſts; making then $ss=-3$, I have $s=\sqrt{-3}$, and ſo the two roots of the equation will now be $2+s$, and $2-s$; the ſum of theſe two roots is 4, and the product of their multiplication $4-ss$; but if $ss=-3$, $-ss=+3$, and $4-ss=4+3=7$; therefore the equation with theſe roots will be $xx=4x-7$: and this will be further evident by the reſolution; for if $xx=4x-7$, that is, if $xx-4x=-7$, we ſhall have $xx-4x+4=-3$, and $x-2=\pm\sqrt{-3}$, and $x=2+\sqrt{-3}$, or $2-\sqrt{-3}$.

How to determine the ſigns of the poſſible roots of a quadratic equation without reſolving it.

109. If all the terms of a quadratic equation be thrown on one ſide of the equation, ſo as to be made equal to nothing; and if the term wherein xx, the ſquare of the unknown quantity is concerned, be made the firſt, that wherein x, the ſimple power is concerned, be made the ſecond, and the abſolute term, as it is called, be made the third; the number of affirmative and negative roots in ſuch an equation may be found by the following rule, to wit, *As often as the ſigns are changed in paſſing through all the terms from the firſt to the laſt, of ſo many affirmative roots will the equation conſiſt; but as often as the ſigns are the ſame, ſo many negative roots will be found in the equation.* This is true in all equations whatever, though at preſent we ſhall only demonſtrate it in the caſe of a quadratic equation: but firſt we ſhall give the following explication of the rule.

Case 1.

Let the equation be $axx-bx+c=0$. Here there are two changes in paſſing through the terms from the firſt to the laſt, to wit, from $+axx$ to $-bx$, and from

from $-bx$ to $+c$; therefore the roots of this equation are both affirmative.

CASE 2.

Let the equation be $axx-bx-c=0$. Here from $+axx$ to $-bx$ is one change, and from $-bx$ to $-c$ is none; therefore this equation consists of an affirmative and a negative root.

CASE 3.

Let the equation be $axx+bx-c=0$. Here in passing from $+axx$ to $+bx$, there is no change of sign, but in passing from $+bx$ to $-c$ there is a change; therefore this equation also consists of an affirmative and a negative root.

CASE 4.

Lastly, let the equation be $axx+bx+c=0$. Here there are no changes, and consequently the roots of this equation are both negative. All these cases I shall demonstrate in the following manner.

CASE 1.

Let the equation be $axx-bx+c=0$, or $axx=bx-c$. Here the product of the two roots is $\frac{c}{a}$ by the last article, that is, the product of the two roots is an affirmative quantity, and therefore those roots must either be both affirmative or both negative; but they cannot be both negative, because their sum is $\frac{+b}{a}$, by the same article; therefore they must both be affirmative.

CASE 2.

Let the equation be $axx-bx-c=0$, or $axx=bx+c$. Here the product of the two roots is $-\frac{c}{a}$, and consequently

ſequently thoſe roots muſt be of different kinds, one affirmative and the other negative; and becauſe their ſum, $+\frac{b}{a}$, is an affirmative quantity, it is an argument that the greater root is affirmative.

Case 3.

Let the equation be $axx+bx-c=0$, or $axx=-bx+c$. Here again the product of the two roots is $\frac{+c}{a}$, which argues one root to be affirmative and the other negative; and becauſe their ſum $\frac{-b}{a}$ is a negative quantity, it is an indication that of theſe two roots, the greater is the negative one.

Case 4.

Laſtly, let the equation be $axx+bx+c=0$, or $axx=-bx-c$. Here the product of the two roots is $+\frac{c}{a}$ an affirmative quantity; therefore the roots are either both affirmative or both negative; but they cannot be both affirmative, becauſe their ſum $\frac{-b}{a}$ is negative; therefore they muſt both be negative.

Impoſſible roots excluded out of the foregoing rule.

The rule here given for determining the number of affirmative and negative roots relates only to poſſible roots; for impoſſible ones cannot be ſaid to belong to any claſs, either of affirmatives or negatives; nay, ſo capricious are they in this reſpect, that in one and the ſame equation, the very ſame impoſſible roots ſhall ſometimes appear under one form, and ſometimes under the other: as for example, this equation $xx+3=0$ may be filled up two ways without affecting,

ing either the equation or its roots; to wit, either thus, $xx-0x+3=0$, the roots of which equation according to the foregoing rule are both affirmative; or thus, $xx+0x+3=0$, the roots of which equation, though it be the ſame with the other, and differs only in form, are both negative: the reaſon of this abſurdity is, that the two roots of the equation $xx+3=0$ are impoſſible, and occaſioned this confuſion by putting on one ſhape in one equation, and another ſhape in the other: this will further appear from the reſolution; for if $xx+3=0$, we have $xx=-3$, and $x=+\sqrt{-3}$, or $-\sqrt{-3}$, which are both impoſſible quantities. Again, the equation $x^3-3=0$ may be filled up various ways; as thus, $x^3-0x^2+0x-3=0$, in which equation, according to the foregoing rule, there are three affirmative roots; or thus, $x^3-0x^2-0x-3=0$, in which equation, there is but one affirmative root and two negative ones: hence an experienced Analyſt would immediately conclude (as is really the caſe) that two of the roots of the equation $x^3-3=0$ were impoſſible, and that they ſtood for affirmative quantities in the former way of putting the equation, and for negative ones in the latter. This will further appear, when we come to treat of cubic equations.

Of biquadratics, and other equations in the form of quadratics.

110. Thus much for the reſolution, nature, and properties of a quadratic equation: I ſhall only add an example or two more of other equations that ſometimes put on the form of quadratics, and have done.

Example 12.

Let the equation to be reſolved be, $\frac{1600}{xx}+xx=116$; therefore $1600+x^4=116xx$; therefore $x^4=116xx-1600$. This equation is, properly ſpeaking,

a biquadratic, that is, an equation wherein the fourth power of the unknown quantity is concerned: now as every poſſible quadratic equation has two roots, which will equally anſwer the condition thereof, ſo a cubic equation, that is, an equation that riſes to the third power of the unknown quantity, may have three ſuch roots, a biquadratic four, *&c.*: but the equation $x^4 = 116xx - 1600$, though it be a biquadratic, and admits of four roots, yet it is in the form of a quadratic, if we conſider xx as the unknown quantity; in which caſe x^4 muſt be looked upon as the ſquare of the unknown quantity, and the equation muſt be referred to the general one in art. 103, thus; $A=1$, $B=116$, $C=-1600$, $BB=13456$, $4AC=-6400$, $ss=7056$, $s=84$, $\frac{B+s}{2A}=100$ $\frac{B-s}{2A}=16$; therefore in this equation, $xx=100$, or 16: now if $xx=100$, we ſhall have $x=+$ or -10; if $x^2=16$, we ſhall have $x=+$ or -4; therefore the four roots of this biquadratic equation are, $+10$, -10, $+4$ and -4: but though in this equation x has four ſignifications, xx has but two, *viz.* 100 and 16, either of which being ſubſtituted inſtead of xx in the original equation, will anſwer that equality, as may eaſily be tried.

N. B. Whenever of the four roots of a biquadratic equation any two are equal and contrary to the other two, the equation will be in form of a quadratic, and may be reſolved accordingly.

Example 13.

Let the equation be $\frac{576}{xx} - xx = 55$: here we have $576 - x^4 = 55xx$, and $x^4 + 55xx = 576$, and $x^4 = -55x^2 + 576$; therefore, according to the general equation in art. 103, $A=1$, $B=-55$, $C=576$, $BB=3025$, $4AC=2304$, $ss=5329$, $s=73$, $\frac{B+s}{2A}=9$, $\frac{B-s}{2A}=-64$;

64; therefore in this equation, $xx=+9$ or -64: if $xx=+9$, $x=+$ or -3; if $xx=-64$, x will be equal to $+\sqrt{-64}$, or $-\sqrt{-64}$, both which values are impoſſible; ſo that in this equation x has but two values, $+$ or -3, the other two being impoſſible; and xx has two values, to wit, $+9$ and -64, which are both poſſible, and which, being ſubſtituted inſtead of xx into the original equation, will anſwer that equality. From this example it is eaſy to ſee, that a biquadratic equation may have four roots, and never can have more; yet it may ſometimes have fewer, upon the account of ſome of its roots becoming impoſſible; nay inſtances might eaſily be given wherein all the roots of a biquadratic equation are impoſſible.

If any one diſapproves of the reſolutions here given, he may perhaps reliſh the following better: let the equation be $Ax^4=Bx^2+C$; here putting z for xx, and conſequently zz for x^4, the equation will be changed into this common quadratic, $Azz=Bz+C$; which being reſolved, z or xx, and conſequently x itſelf will be known: ſuppoſe the equation to be $Ax^6=Bx^3+C$; here putting z for x^3, the equation will be changed into a quadratic, as before, to wit, $Azz=Bz+C$, the reſolution whereof will give z for x^3, and conſequently x by an extraction of the cube root: laſtly, let the equation be $Ax=Bx\sqrt{x}+C$; here putting zz for x, and z for $\sqrt{z}$, the equation will be $Azz=Bz+C$, as before; whence z, and conſequently zz or x will be known.

The ſolution of ſome problems producing quadratic equations.

Problem 69.

111. *It is required to divide the number* 60 *into two ſuch parts, that the product of their multiplication may amount to* 864.

SOLUTION.

Put x for one of the parts; then will the other part be $60-x$, and the product of their multiplication will be $60x-xx$; whence the equation will be $60x-xx=864$: therefore $xx+864=60x$, and $xx=60x-864$: this equation, compared with the general one in art. 103, gives $A=1$, $B=60$, $C=-864$, $BB=3600$, $4AC=-3456$, $ss=144$, $s=12$, $\frac{B+s}{2A}=36$, $\frac{B-s}{2A}=24$; therefore the parts sought are 24 and 36; which upon trial will answer the conditions of the problem.

Observations upon the foregoing problem.

OBSERVATION 1st.

In this problem we may clearly see the necessity of the unknown quantity's having sometimes two distinct values in one and the same equation: for here, if I put x for the greater part of 60, the less will be $60-x$, and the equation will be $60x-xx=864$: suppose now I put x for the less part; then the greater will be $60-x$, and the equation will still be $60x-xx=864$; therefore, whether x be put for the greater or the less part, we still fall into the same equation $60x-xx=864$; whence I infer, that this equation must either give us both the parts sought, or neither; since no reason can be shewn why it should give us one part rather than the other.

OBSERVATION 2d.

Hence also we see the necessity sometimes of impossible roots, to wit, when the cases of problems to be solved by them become impossible: as for instance, if any number, as 60, be divided into two parts, the nearer the two parts approach towards an equality,

the greater will be the product of their multiplication; and therefore, if the parts be equal, the product will be the greateſt poſſible: thus if the parts be 24 and 36, the product will be 864; if they be 25 and 35, the product will be 875; if 30 and 30, the product will be 900, which will be the greateſt poſſible: let us now for once put an impoſſible caſe, and let it be required to divide the number 60 into two ſuch parts that the product of their multiplication may amount to 901; here the equation will be $60x - xx = 901$; which being reſolved according to art. 103, gives $x = \frac{60 + \sqrt{-4}}{2}$, or $\frac{60 - \sqrt{-4}}{2}$; but theſe values of x may be reduced to more ſimple terms thus; $-4 = -1 \times +4$; therefore $\sqrt{-4} = \sqrt{-1} \times \sqrt{+4} = \sqrt{-1} \times 2$; therefore $\frac{\sqrt{-4}}{2} = \sqrt{-1}$; but $\frac{60}{2} = 30$; therefore the two parts ſought are $30 + \sqrt{-1}$, and $30 - \sqrt{-1}$, both which are impoſſible upon the account of the impoſſibility of $\sqrt{-1}$; and yet theſe two parts abſtractedly conſidered will anſwer the conditions of the problem; for if $\sqrt{-1}$ be made equal to s, the two parts will be $30 + s$ and $30 - s$ whoſe ſum is 60, and the product of whoſe multiplication is $900 - ss$; but if $s = \sqrt{-1}$, we ſhall have $ss = -1$, and $-ss = +1$, and $900 - ss = 901$; therefore the product of the two parts, $30 + \sqrt{-1}$, and $30 - \sqrt{-1}$, amount to 901, as was required.

Observation 3d.

Laſtly, we here alſo ſee the neceſſity of both the roots of a quadratic equation becoming impoſſible at once. Two impoſſible quantities added together, may ſometimes make a poſſible one, becauſe one quantity may be as much impoſſible one way as the

other is the contrary way: thus the two impoſſible quantities $30+\sqrt{-1}$ and $30-\sqrt{-1}$ being added together make 60, the impoſſible ſurds $+\sqrt{-1}$ and $-\sqrt{-1}$ deſtroying one another; but a poſſible and an impoſſible quantity when added together can never make a poſſible one; and therefore the two parts of 60 in this problem muſt either be both poſſible, or both impoſſible.

Problem 70.

112. *There are three numbers in continual proportion, whereof the middle term is ſixty, and the ſum of the extremes one hundred twenty five: What are the extremes?*

Solution.

For the extremes put x and $125-x$, and you will have this proportion; x is to 60 as 60 is to $125-x$, whence, by multiplying extremes and means, you have this equation, $125x-xx=3600$, or $xx+3600=125x$, or $x^2=125x-3600$: here then $A=1$, $B=125$, $C=-3600$, $BB=15625$, $4AC=-14400$, $ss=1225$, $s=35$, $\frac{B+s}{2A}=80$, $\frac{B-s}{2A}=45$, therefore in this equation, $x=45$, or 80; but x repreſents either extreme, becauſe, which extreme ſoever x is put for, the other will be $125-x$, and the ſame equation will ariſe, to wit, $125x-xx=3600$; therefore the two extremes are 45 and 80; and they will anſwer the conditions of the problem; for 45 is to 60 as $\frac{45}{15}$ is to $\frac{60}{15}$, that is, as 3 to 4; and 60 is to 80 as $\frac{60}{20}$ is to $\frac{80}{20}$, which is alſo as 3 to 4.

Problem 71.

113. *It is required, having given the ſum or the difference of two numbers, together with the ſum of their ſquares, to find the numbers.*

Solution.

SOLUTION.

Caſe 1ſt. Let the ſum of the numbers ſought be 28, and the ſum of their ſquares 400; then putting x and $28-x$ for the two numbers ſought, the ſquare of the former will be xx, the ſquare of the latter $784-56x+xx$; and the ſum of their ſquares $2xx-56x+784=400$; and the ſame equation will ariſe, whether x be made to ſtand for one number or the other; therefore the two values of x in this equation will be the two numbers ſought; but if $2xx-56x+784=400$, we ſhall have $2xx-56x=-384$; divide the whole by 2 for a more ſimple equation, and you will have $xx-28x=-192$; and $xx=28x-192$; which equation being reſolved according to art. 103, gives $x=12$, or 16; therefore 12 and 16 are the two numbers ſought.

Caſe 2d. Let now the difference of two numbers be given, ſuppoſe 4, and let the ſum of their ſquares be 400, as before; then, putting x for the leſs number, and $x+4$ for the greater, the ſum of their ſquares will be $2xx+8x+16=400$; whence $2xx+8x=384$, $xx+4x=192$, $xx+4x+4=196$, $x+2=\pm 14$, $x=+12$ or -16; now it cannot be ſuppoſed that $+12$ and -16 are the two numbers required in the problem, for their difference is 30, not 4; neither ought it to be expected; for when x was put for the leſs number, and $x+4$ for the greater, the equation was $2xx+8x+16=400$; but if x be put for the greater number, and conſequently $x-4$ for the leſs, the equation will be $2xx-8x+16=400$, different from the former; ſince then a different equation ariſes according as x is put for the greater or leſs number, it cannot be expected that one and the ſame equation ſhould give both: the true ſtate of the caſe is this; there are two pairs of numbers which will equally ſolve this queſtion, and the equation $2xx+8x+16=400$ gives the leſſer number of each pair; for if we make $x=12$,

and $x+4=16$, the numbers 12 and 16 will ſolve the problem; on the other hand, if we make $x=-16$, we ſhall have $x+4=-12$, and the numbers -16 and -12 will equally ſolve the problem; for their difference is $+4$, and the ſum of their ſquares $+400$: here then we may obſerve, that affirmative and negative ſolutions of problems are of equal eſtimation in the nature of things, though perhaps not amongſt men, the narrowneſs of our minds contracting our views; but truth does juſtice alike to all: certainly negative numbers differ no more from affirmative ones, than affirmative ones do from one another, which is in degree, not in kind; and therefore, in the nature of things, negative quantities ought no more to be excluded out of the ſcale of number than affirmative ones, though in common life they are ſet aſide.

Problem 72.

114. *What two numbers are thoſe, whoſe ſum is ſeventeen, and the ſum of their cubes one thouſand three hundred forty-three?*

Solution.

For the two numbers ſought put x and $17-x$, and the cube of the former will be xxx, and the cube of the latter $4913-867x+51xx-xxx$, as appears from the following computation:

$$\begin{array}{r} 17-x \\ 17-x \\ \hline 289-17x+xx \\ \quad -17x \\ \hline 289-34x+xx \\ 17-x \\ \hline 4913-578x+17xx-x^3 \\ \quad -289x+34xx \\ \hline 4913-867x+51xx-x^3. \end{array}$$

Therefore

Therefore the ſum of theſe two cubes will be $51xx-867x+4913=1343$, and the equations will be the ſame, whichſoever of the two numbers ſought x is made to ſtand for; but if $51xx-867x+4913=1343$, we ſhall have $51xx-867x=-3570$; divide the whole by 51, which, though not neceſſary, is however convenient, to render the equation more ſimple, ſince it may be done without fractions, and you will have, $xx-17x=-70$; which, being reduced as in art. 103, gives $x=7$, or 10; therefore 7 and 10 are the two numbers ſought.

Problem 73.

115. *Let there be a ſquare whoſe ſide is a hundred and ten inches; it is required to aſſign the length and breadth of a rectangled parallelogram or long ſquare, whoſe perimeter ſhall be greater than that of the ſquare by four inches, but whoſe area ſhall be leſs than the area of the ſquare by four ſquare inches.*

N. B. By the perimeter of a plain figure is meant the length of a line that will encompaſs it round; ſo that the perimeter of a ſquare is equal to four times its ſide; and the perimeter of a rectangled parallelogram is equal to twice its length and twice its breadth added together.

Solution.

Since the ſide of the given ſquare is 110 inches, its area will be 12100 ſquare inches; therefore the area of the parellelogram ſought will be 12096 ſquare inches: again, the perimeter of the given ſquare is 440 inches; therefore the perimeter of the parallelogram ſought muſt be 444 inches; therefore half its perimeter, or its length and breadth added together, muſt be 222 inches; therefore, if either the length or breadth be called x, the other will be $222-x$, and the area will be $222x-xx=12096$; which equation reſolved according to art. 103, will give $x=96$, or 126; therefore the breadth of the parallelogram

ſought

ſought muſt be 96 inches, and the length 126 inches: and theſe numbers will anſwer the conditions of the queſtion; for twice the length will be 252, twice the breadth 192, and the whole perimeter 444; moreover 126x96, or the area, will be 12096, as the problem requires.

Scholium.

This problem ſhews how groſsly they are miſtaken who think to eſtimate the areas or magnitudes of plain figures by their perimeters, as if ſuch figures were greater or leſs in proportion as their perimeters were ſo; whereas here we ſee, that the perimeter of one figure may be greater than that of another by four inches, and at the ſame time its area may be leſs than the area of that other by four ſquare inches. This error, it is true, does not obtain but in low and vulgar minds, nor there neither any longer than whilſt it continues to be a matter of mere ſpeculation, and truth and falſhood are equally indifferent to them: for whenever men come to apply their notions, and find it their intereſt not to be miſtaken, then it is, and frequently not till then, that they begin to look about them, correct their errors, and entertain more juſt and accurate notions of things. The greateſt part of mankind have a natural averſion to abſtract thinking, and, where their intereſt is not concerned, will rather ſubmit their opinions to humour, caprice, and cuſtom, or be content to be without any opinions at all, than they will examine ſtrictly into the nature of things.

Problem 74.

116. *One buys a certain number of oxen for eighty guineas; where it muſt be obſerved, that if he had bought four more for the ſame money, they would have come to him a guinea apiece cheaper: What was the number of oxen?*

SOLUTION.

For the number of oxen put x; then to find the price of a ſingle ox, ſay, if x oxen coſt 80 guineas, what will one ox coſt? and the anſwer is $\frac{80}{x}$; and for the ſame reaſon, if he had bought 4 more, that is, $x+4$ for the ſame money, the price of an ox would have been $\frac{80}{x+4}$; but, according to the problem, the latter price is leſs than the former by one guinea; whence we have this equation $\frac{80}{x}-1=\frac{80}{x+4}$, therefore $80-x=\frac{80x}{x+4}$; therefore $\overline{80-x}\times\overline{4+x}$ or $320+76x-xx=80x$; therefore $xx+80x=76x+320$; therefore $xx=-4x+320$. Here then $A=1$, $B=-4$, $C=320$, $BB=16$, $4AC=1280$, $ss=1296$, $s=36$, $\frac{B+s}{2A}=16$, $\frac{B-s}{2A}=-20$; therefore $x=+16$, or -20; therefore the number of oxen was 16, the negative root -20 having no place in this problem; and this number 16 anſwers the condition of the problem; for if 16 oxen coſt 80 guineas, one will coſt 5 guineas: but if 20 oxen coſt 80 guineas, one will coſt 4 guineas.

N. B. The equation $\frac{80}{x}-1=\frac{80}{x+4}$, gave $x=+16$ or -20, not becauſe the number -20 would ſolve the problem, but becauſe it would ſolve the equation; for if we make $x=-20$, we ſhall have $\frac{80}{x}=-4$, and $\frac{80}{x}-1=-5$; on the other ſide, we ſhall have $x+4=-16$, and $\frac{80}{x+4}=-5$; therefore

if

if x be made equal to -20, we ſhall have $\frac{80}{x} - 1 = \frac{80}{x+4}$, becauſe both ſides are equal to -5; and ſo in all other caſes we ſhall always find, that the ſeveral roots of an equation will be ſuch as will equally ſolve that equation, though perhaps they may not be equally proper to ſolve the problem from whence the equation was deduced: but of this more in another place.

Problem 75.

117. *A certain company at a tavern had a reckoning of ſeven pounds four ſhillings to pay; upon which two of the company ſneaking off, obliged the reſt to pay one ſhilling apiece more than they ſhould have done: What was the number of perſons?*

Solution.

For the number of perſons put x; then to find the number of ſhillings every man ſhould have paid, ſay, if x perſons were to have paid 144 ſhillings, what muſt one man have paid? and the anſwer is $\frac{144}{x}$; therefore $\frac{144}{x}$ is the number of ſhillings every man ſhould have paid; and for the ſame reaſon $\frac{144}{x-2}$ is the number of ſhillings every man did pay; but, according to the problem, this latter reckoning is greater than the former by one ſhilling; whence the equation will be $\frac{144}{x} + 1 = \frac{144}{x-2}$; therefore $144 + x = \frac{144x}{x-2}$; therefore $\overline{x-2} \times \overline{144+x}$, or $xx + 142x - 288 = 144x$; therefore $xx - 288 = 2x$; therefore $xx = 2x + 288$. Here then $A = 1, B = 2, C = 288, BB = 4, 4AC = 1152, ss = 1156,$ $s = 34,$

$s = 34$, $\frac{B+s}{2A} = 18$, $\frac{B-s}{2A} = -16$; therefore $x = +18$, or -16; but negative roots have no place in this sort of problems; therefore the number of persons was 18, which answers the condition; for $\frac{144}{18} = 8$, and $\frac{144}{16} = 9$.

Problem 76.

118. *What number is that, which being added to its square root will make two hundred and ten?*

Solution.

For the number sought put xx; then will its square root be x, and the equation will be $xx + x = 210$, or $xx = -x + 210$; where $A = 1$, $B = -1$, $C = 210$, $BB = 1$, $4AC = 840$, $ss = 841$, $s = 29$, $\frac{B+s}{2A} = 14$, $\frac{B-s}{2A} = -15$; therefore $x = +14$, or -15; therefore xx or the number sought equals 196 or 225, supposing the square root of 225 to be -15; and either of these two numbers will answer the condition; for $196 + 14 = 210$, and $225 - 15 = 210$.

Problem 77.

119. *What two numbers are those, the product of whose multiplication is one hundred ninety two, and the sum of whose squares is six hundred and forty?*

Solution.

For the two numbers sought put x and $\frac{192}{x}$; then will the square of the former be xx, and that of the latter $\frac{36864}{xx}$, and the sum of their squares will be $xx + \frac{36864}{xx} = 640$;

$=640$; which equation will be the ſame, whichſoever of the two numbers ſought x is made to ſtand for; but if $xx+\frac{36864}{xx}=640$, we ſhall have $x^4+36864=640xx$; and $x^4=640x^2-36864$: here then $A=1$, $B=640$, $C=-36864$, $BB=409600$, $4AC=-147456$, $ss=262144$, $s=512$, $\frac{B+s}{2A}=576$, $\frac{B-s}{2A}=64$; therefore $xx=576$, or 64; therefore $x=+$ or -24, or $+$ or -8; therefore the two numbers ſought are 8 and 24.

Problem 78.

120. *One lays out a certain ſum of money in goods, which he ſold again for twenty-four pounds, and gained as much* per cent. *as the goods coſt him: I demand what they coſt him.*

N. B. One's gain *per cent.* is ſo much as he gains, every hundred pounds he lays out; or if he does not lay out ſo much as a hundred pounds, his gain *per cent.* however, is ſo much as he would have gained if he had laid out a hundred pounds with the ſame advantage: thus if he lays out 20 pounds and gains 2 pounds, he is ſaid to make 10 *per cent.* of his money, becauſe 20 pounds is to 2 pounds as 100 pounds is to 10 pounds.

Solution.

Put x for the money laid out, and the gain will be $24-x$; ſay then, by the golden rule, if in laying out x he gained $24-x$, what would he have gained if he had laid out 100 pounds to the ſame advantage? and the anſwer will be $\frac{2400-100x}{x}$; therefore $\frac{2400-100x}{x}$ will be his gain *per cent.*; but, according to the problem, this gain is equal to x, the money laid out; therefore $x=\frac{2400-100x}{x}$, and $xx=2400-100x$:

here

here then $A=1$, $B=-100$, $C=2400$, $BB=10000$, $4AC=9600$, $ss=19600$, $s=140$, $\frac{B+s}{2A}=20$, $\frac{B-s}{2A}=-120$; therefore the money laid out was 20 pounds; therefore his gain *per* 20 was 4 pounds; therefore his gain *per cent.* was 20 pounds, equal to the money laid out.

Problem 79.

121. *One lays out thirty-three pounds fifteen ſhillings in cloth, which he ſold again for forty-eight ſhillings* per *piece, and gained as much in the whole as a ſingle piece coſt: I demand how he bought in his cloth* per *piece.*

Solution.

Put x for the number of ſhillings every ſingle piece was bought for, and the gain *per* piece will be $48-x$; ſay then, by the rule of proportion, if in laying out x he gained $48-x$, what did he gain in laying out 33 pounds 15 ſhillings, or 675 ſhillings? and the anſwer will be $\frac{32400-675x}{x}$; therefore $\frac{32400-675x}{x}$ will be his whole gain; but, according to the problem, the whole gain was equal to x, the money given for a ſingle piece; therefore $x=\frac{32400-675x}{x}$; therefore $xx=32400-675x$; therefore $A=1$, $B=-675$, $C=32400$, $BB=455625$, $4AC=129600$, $ss=585225$, $s=765$, $\frac{B+s}{2A}=45$, $\frac{B-s}{2A}=-720$; therefore $x=+45$, or -720; therefore the money every ſingle piece was bought for was 45 ſhillings, and the gain *per* piece was 3 ſhillings; but if 45 ſhillings gains 3 ſhillings, 33 pounds 15 ſhillings, or 675 ſhillings, will gain 45 ſhillings; therefore the whole gain was 45 ſhillings, equal to the money given for a ſingle piece.

N, B.

N. B. It is not impoſſible but that ſometimes two different problems may produce one and the ſame equation; and then the equation muſt provide equally for both: therefore, in ſuch a caſe, though the equation has two roots, and both affirmative, yet it muſt not be expected that both roots ſhould equally ſerve for the ſolution of one problem, and that there ſhould be no ſolution left for the other; we ought rather to conclude, whenever an equation gives two roots, and both affirmative, whereof one only will ſolve the problem that produced the equation, we ought, I ſay, rather to conclude, that the other root is for the ſolution of ſome other problem producing the ſame equation; a curious inſtance whereof we have in the two following problems.

Problem 80.

122. *Two travellers,* A *and* B, *ſet out from two places* C *and* D *at the ſame time,* A *from* C *bound for* D, *and* B *from* D *bound for* C; *when they met and had computed their travels, it was found, that* A *had travelled thirty miles more than* B, *and that, at their rate of travelling,* A *expected to reach* D *in four days, and* B *to reach* C *in nine days: I demand the diſtance between the two places* C *and* D.

Solution.

Put x for the number of miles between C and D, then it is plain that A and B both together had travelled x miles when they met; therefore as much as the miles travelled by A exceeded $\frac{x}{2}$, juſt ſo much did the miles travelled by B come ſhort of $\frac{x}{2}$; but, by the ſuppoſition, A's miles exceeded thoſe of B by 30; therefore A muſt have travelled $\frac{x}{2}+15$ or $\frac{x+30}{2}$ miles;

and

and B muſt have travelled $\frac{x}{2}-15$ or $\frac{x-30}{2}$ miles; therefore the remaining part of A's journey is $\frac{x-30}{2}$ miles, which he expects to perform in four days, and the remaining part of B's journey is $\frac{x+30}{2}$ miles, which he expects to perform in 9 days: theſe things being allowed, let us now enquire into the number of days each hath travelled already; and firſt for A ſay, if A expects to travel $\frac{x-30}{2}$ miles in 4 days, in how many days did he travel $\frac{x+30}{2}$ miles? and the anſwer is $\frac{4\times\frac{x+30}{2}}{\frac{x-30}{2}}=\frac{4\times x+30}{x-30}$; then for B ſay, if B expects to travel $\frac{x+30}{2}$ miles in 9 days, in how many days did he travel $\frac{x-30}{2}$ miles? and the anſwer is $\frac{9\times x-30}{x+30}$; therefore A hath travelled $\frac{4\times x+30}{x-30}$ days, and B $\frac{9\times x-30}{x+30}$ days from the time of their firſt ſetting out: but as they both ſet out at the ſame time, and are now met, they muſt both have travelled the ſame number of days; therefore $\frac{4\times x+30}{x-30}=\frac{9\times x-30}{x+30}$: multiply both ſides of the equation into $x-30$, and you will have $4\times x+30=\frac{9\times x-30\times x-30}{x+30}$; again multiply by $x+30$, and you will have $4\times x+30\times x+30$

$\overline{x+30} = 9 \times \overline{x-30} \times \overline{x-30}$; extract the ſquare root of both ſides, and you will have $\pm 2 \times \overline{x+30} = \pm 3 \times \overline{x-30}$: this general equation reſolves itſelf into four particular ones, *viz.*

1ſt, $+2 \times \overline{x+30} = +3 \times \overline{x-30}$.
2d, $+2 \times \overline{x+30} = -3 \times \overline{x-30}$.
3d, $-2 \times \overline{x+30} = +3 \times \overline{x-30}$.
4th, $-2 \times \overline{x+30} = -3 \times \overline{x-30}$.

But as the two laſt of theſe equations give but the ſame values as the two former, I ſhall only make uſe of the two former, thus;

1ſt, Suppoſe $+2 \times \overline{x+30} = +3 \times \overline{x-30}$, then we ſhall have $2x+60 = 3x-90$, and $x = 150$.

2dly, Suppoſe $+2 \times \overline{x+30} = -3 \times \overline{x-30}$, then we ſhall have $2x+60 = -3x+90$, and $x = 6$; therefore the diſtance between the two places *C* and *D* muſt either be 150 miles, or 6 miles; but 6 miles it cannot be, becauſe when *A* came up to *B*, he had travelled 30 miles more than *B*, and had not yet reached *D*; therefore the diſtance between the two places *C* and *D* muſt be 150 miles; which will ſatisfy the problem; for then *A* muſt have travelled $75+15$, or 90 miles, and *B* $75-15$, or 60 miles, from the time of their ſetting out; therefore *A* has 60 miles, and *B* 90 to travel; but if *A* could travel 60 miles in 4 days, he muſt, at the ſame rate, have travelled 90 miles in 6 days; and if *B* could travel 90 miles in 9 days, he muſt have travelled 60 miles alſo in 6 days; therefore they both travelled the ſame number of days from the time of their firſt ſetting out to the time of their meeting, as the problem requires.

Problem 81.

123. *Two travellers* A *and* B *ſet out from two places* C *and* D *at the ſame time*; A *from* C *with a deſign to paſs*

paſs through D, *and* B *from* D *with a deſign to travel the ſame way: after* A *had overtaken* B, *and they had computed their travels, it was found, that they had both together travelled thirty miles, that* A *had paſſed through* D *four days before, and that* B, *at his rate of travelling, was a nine days journey diſtant from* C: *I demand the diſtance between the two places* C *and* D.

SOLUTION.

Put x for the number of miles from C to D; then it is plain, that A muſt have travelled more miles than B by x; but they both together travelled 30 miles, by the ſuppoſition; therefore as much as A's miles exceeded 15, juſt ſo much B's miles came ſhort of 15: but the whole difference was x, as above; therefore A muſt have travelled $15+\frac{x}{2}$ or $\frac{30+x}{2}$ miles, and B muſt have travelled $15-\frac{x}{2}$ or $\frac{30-x}{2}$ miles; therefore A's diſtance from D, after he had overtaken B, was $\frac{30-x}{2}$ miles, which he had travelled in 4 days, and B's diſtance from C was $\frac{30+x}{2}$ miles, which by the problem he could travel in 9 days; therefore, to find how many days each had travelled already, ſay, if A hath travelled $\frac{30-x}{2}$ miles from D in 4 days, in how many days did he travel $\frac{30+x}{2}$ miles ſince his departure from C? and the anſwer is $\frac{4\times\frac{30+x}{2}}{\frac{30-x}{2}}=\frac{4\times 30+x}{30-x}$; again

ſay, if B could travel $\frac{30+x}{2}$ miles, the whole diſtance from C, in 9 days, in how many days did he travel $\frac{30-x}{2}$ miles ſince his ſetting out from D? and the anſwer is $\frac{9\times 30-x}{30+x}$; but as they both ſet out at the ſame time, and A has now overtaken B, they muſt both have travelled the ſame number of days; therefore we have this equation, $\frac{4\times 30+x}{30-x} = \frac{9\times 30-x}{30+x}$: multiply both ſides into $30-x$, and you will have $4\times 30+x = \frac{9\times 30-x\times 30-x}{30+x}$; again multiply by $30+x$, and you will have $4\times 30+x\times 30+x = 9\times 30-x\times 30-x$; but the product of $30-x\times 30-x$ differs nothing from the product of $x-30\times x-30$, as will appear upon tryal, and will be further evident from hence, that $30-x$ and $x-30$ differ no more from one another than an affirmative quantity does from an equal negative one, and therefore each multiplied into itſelf muſt give the ſame product, therefore the equation as it now ſtands is, $4\times x+30\times x+30 = 9\times x-30\times x-30$; but this equation is the ſame with the equation deduced from the laſt problem, which juſtifies what I obſerved before, art. 121, that different problems may produce the ſame equation; therefore the two roots of this equation will be 6 and 150, as in the laſt article; therefore the diſtance between the two places C and D muſt either be 6 miles, or 150 miles; but 150 miles it cannot be, becauſe, after A had paſſed from C beyond D, and at laſt had overtaken B, they had both travelled but 30 miles;

miles; therefore the diſtance from *C* to *D* muſt be 6 miles; and this number will anſwer the conditions of the problem; for then *A*, when he had overtaken *B*, had travelled 15+3 or 18 miles, and *B* 15—3 or 12 miles; therefore *A* had got 12 miles beyond *D* in 4 days time, and *B* was 18 miles diſtant from *C*, which he could travel in 9 days; but at the rate of 12 miles in 4 days, *A* muſt have performed his 18 miles journey in 6 days; and at the rate of 18 miles in 9 days, *B* muſt have performed his 12 miles journey alſo in 6 days; therefore, from the time of their firſt ſetting out to the time of *A's* overtaking *B*, they had both travelled the ſame number of days, as the problem requires; therefore the ſuppoſition whereupon this calculation was founded, to wit, that the diſtance of *C* from *D* was 6 miles, is juſt.

N. B. The ſolutions here given of the two laſt problems are, in my opinion, the moſt natural, though ſomewhat different from the reſt.

A LEMMA.

124. *The ſum of a ſeries of quantities in arithmetical progreſſion may be had by adding the greateſt and leaſt terms together, and then multiplying either half that ſum by the whole number of terms, or the whole ſum by half the number of terms, or laſtly, by multiplying the whole ſum into the whole number of terms, and then taking half the product:* thus in the ſeries 2, 4, 6, 8, 10, 12, where the leaſt term is 2, the greateſt 12, their ſum 14, and the number of terms 6; the ſum of all the terms taken together will be 7×6, or 14×3, or $\frac{14\times6}{2} = 42$. This will beſt appear by writing down the ſeries 2, 4, 6, 8, 10, 12, and then by writing down over it the ſame ſeries inverted, 12, 10, 8, 6, 4, 2: for, if this be done, 2, the firſt term of the lower ſeries, added to 12, the firſt term of the up-

per ſeries (which is the ſame as the greateſt and leaſt terms of the ſame ſeries added together) will make 14; in like manner, every term of the lower ſeries added to the next above it will make 14; therefore both the ſerieſes together will be equal to 14 as often taken as there are terms in either ſeries, that is, 6 times 14, or 84; therefore either ſeries taken alone will be equal to 42.

12	10	8	6	4	2
2.	4.	6.	8.	10.	12.
14.	14.	14.	14.	14.	14.

The deſign of this lemma is, to add the terms of a ſeries together, where only the greateſt and leaſt terms and the number of terms are known, or ſuppoſed to be known; the intermediate terms being either not aſſigned, or too many to be ſummed up by a continual addition.

Problem 82.

125. *A traveller, as* A, *ſets out from a certain place, and travels one mile the firſt day, two miles the ſecond day, three the third, four the fourth,* &c; *and five days after, another, as* B, *ſets out from the ſame place, and travels the ſame road at the rate of twelve miles every day: I demand how long and how far* A *muſt travel before he is overtaken by* B.

Solution.

Put x for the number of days A travelled before he was overtaken by B; then, to find an expreſſion for the number of miles travelled by him in that time, I obſerve that in three days A travelled over $1+2+3$ miles, that is, he travels over a ſeries of miles in arithmetical progreſſion, whereof the number of terms is 3, the greateſt term 3, and the leaſt term 1.; in four

four days he travels over a ſeries whereof the number of terms is 4, the greateſt term 4, and the leaſt 1; therefore, univerſally, in any number x of days, he muſt travel over a ſeries of miles in arithmetical progreſſion, whereof the number of terms is x, the greateſt term x, and the leaſt term 1; but the ſum of the extremes of this ſeries is $x+1$, which, multiplied by x the number of terms, gives $xx+x$, the half whereof is $\frac{xx+x}{2}$; therefore, by the lemma foregoing, $\frac{xx+x}{2}$ will be the ſum of this ſeries, and conſequently the miles travelled by A before he was overtaken: again, if A travel x days, B muſt have travelled $x-5$ days, which at the rate of 12 miles a day, gives $12x-60$ for the miles travelled by B when he overtook A; but as they both ſet out from the ſame place, and are now got together, they muſt have travelled the ſame number of miles; whence we have this equation, $\frac{xx+x}{2}=12x-60$; therefore $xx+x=24x-120$; therefore $xx=23x-120$; compare this equation with the general one in art. 103, and you will have $A=1$, $B=23$, $C=-120$, $BB=529$, $4AC=-480$, $ss=49$, $s=7$, $\frac{B+s}{2A}=15$, $\frac{B-s}{2A}=8$; therefore $x=8$, or 15: now, for the better application of theſe roots to the ſolution of this problem, it muſt be obſerved, that the problem is more limited than the equation deduced from it; juſt as if, in tranſlating out of one language into another, the terms of the latter, inſtead of being adequate to thoſe of the former, ſhould be found to be of a more extenſive ſignification: in the problem it is only ſuppoſed that B overtakes A, whereas in the equation it is ſuppoſed that A and B are got both together by having travelled the ſame number of miles from their firſt ſetting out,

without ſpecifying whether this ariſes from *B's* overtaking *A*, or from *A's* overtaking *B*; both which in this caſe muſt neceſſarily happen in the courſe of their travels, provided they be but continued long enough for that purpoſe: for ſince at firſt *B* is the ſwifter traveller, whenever they come together, it muſt ariſe from *B's* overtaking *A*, which happens after *A* has travelled 8 days; then, if we ſuppoſe them ſtill to continue their travels, *B* paſſes by *A*, and continues before him for ſome time; but after 12 days, *A* becomes the ſwifter traveller, and muſt neceſſarily come up to *B* again after he has travelled 15 days: therefore though the two roots, 8 and 15, will both anſwer the condition of the equation, yet but one of them, to wit, 8, will anſwer the condition of the problem; and that both of them will anſwer the condition of the equation, will be evident as follows.

In 8 days *A* travels over a ſeries of miles whereof the number of terms is 8, the greateſt 8; and the leaſt 1; the ſum of which ſeries is 36 miles; but when *A* has travelled 8 days, *B* muſt have travelled 3 days, during which time, at the rate of 12 miles a day, he alſo muſt have travelled 36 miles; therefore after *A* hath travelled 8 days, *A* and *B* muſt neceſſarily find themſelves together: again, in 15 days, *A* muſt have travelled over a ſeries of miles, whereof the number of terms is 15, the greateſt 15, the leaſt 1, and the ſum 120 miles; but when *A* had travelled 15 days, *B* muſt have travelled 10 days, which at 12 miles a day gives alſo 120 miles; therefore now again *A* and *B* muſt find themſelves together; and conſequently 8 and 15 equally anſwer the ſuppoſition contained in the equation.

N. B. If we ſuppoſe *B* after 5 days to have begun to follow *A*, and to have travelled only 10 miles a day, he could never have overtaken *A*, nor *A* him, ſo that in this caſe both the roots would have become impoſſible, as will be found by the reſolution of an equation founded upon this ſuppoſition.

PROBLEM

Problem 83.

126. *It is required to divide the number ten into two ſuch parts, that the product of their multiplication being added to the ſum of their ſquares, may make ſeventy-ſix.*

Solution.

The two parts ſought, x and $10-x$.
The product of their multiplication, $10x-xx$.
The ſum of their ſquares, $2xx-20x+100$.
The product of their multiplication added to the ſum of their ſquares, $\Big\}\ x^2-10x+100=76$.

Whence $x=4$, or 6; but this equation will be the ſame, which part ſoever x is put for; therefore the two parts ſought are 4 and 6.

Problem 84.

127. *It is required to find two numbers with the following properties, to wit, that twice the firſt with three times the ſecond may make ſixty, and moreover, that twice the ſquare of the firſt with three times the ſquare of the ſecond may make eight hundred and forty.*

Solution.

For the two numbers ſought put x and y, and we ſhall have

Equ. 1ſt, $2x+3y=60$, and
Equ. 2d, $2x^2+3y^2=840$.

From the firſt equation, $2x+3y=60$, we have

Equ. 3d, $x=\frac{60-3y}{2}$; and by ſquaring both ſides we have

Equ. 4th, $xx=\frac{3600-360y+9yy}{4}$.

From the ſecond equation, $2xx+3yy=840$, we have

Equ.

Equ. 5th, $xx = \frac{840 - 3yy}{2}$

Compare the two values of xx in the fourth and fifth equations, which muſt neceſſarily be equal one to the other, and you will have $\frac{3600 - 360y + 9yy}{4} = \frac{840 - 3yy}{2}$; multiply both ſides into 2, by halving the denominators, and you will have $\frac{3600 - 360y + 9yy}{2} = 840 - 3yy$; therefore $3600 - 360y + 9yy = 1680 - 6yy$; therefore $3600 - 360y + 15yy = 1680$; therefore $15yy - 360y = -1920$; therefore $15yy = 360y - 1920$; divide by 15 for a more ſimple equation, and you will have $yy = 24y - 128$; whence $y = 8$, or 16: ſuppoſe $y = 8$, then ſince by the third equation $x = \frac{60 - 3y}{2}$, we ſhall have $x = 18$; ſuppoſe $y = 16$, then we ſhall have x or $\frac{60 - 2y}{2} = 6$; therefore there are two pair of numbers that will equally anſwer the conditions of this problem, to wit, 18 and 8, and alſo 6 and 16: for a proof, let us firſt ſuppoſe the numbers to be 18 and 8; and we ſhall have twice the firſt number with three times the ſecond $= 36 + 24 = 60$; and twice the ſquare of the firſt together with three times the ſquare of the ſecond equal to $648 + 192 = 840$: ſecondly, let us ſuppoſe the numbers to be 6 and 16; and we ſhall have twice the firſt with three times the ſecond equal to $12 + 48 = 60$; and twice the ſquare of the firſt with three times the ſquare of the ſecond equal to $72 + 768 = 840$.

Problem 85.

128. *To find four numbers in continual proportion, and ſuch, that the ſum of the two middle terms may be eighteen, and that of the extremes twenty-ſeven.*

Note,

Note, Four numbers are ſaid to be in continual proportion, when the firſt is to the ſecond as the ſecond is to the third, and the ſecond is to the third as the third is to the fourth.

SOLUTION.

For the two middle terms put x and y, without intending which is to be the greater; then the extreme next to x may be found by ſaying, as y is to x ſo is x to $\frac{xx}{y}$, and the extreme next to y may be found by ſaying, as x is to y, ſo is y to $\frac{yy}{x}$; therefore the extremes are $\frac{xx}{y}$ and $\frac{yy}{x}$, and their ſum $\frac{x^3+y^3}{xy}$; therefore the fundamental equations are 1ſt, $x+y=18$, or $x=18-y$; and 2dly, $\frac{x^3+y^3}{xy}=27$, or $x^3+y^3=27xy$; inſtead of x in this equation put $18-y$, its value in the laſt, and you will have $x^3=5832-972y+54y^2-y^3$; therefore $x^3+y^3=5832-972y+54yy$; you will alſo have $27xy$ or $27y\times 18-y=486y-27yy$; therefore $5832-972y+54yy=486y-27yy$; tranſpoſe $486y-27yy$, and you will have $81yy-1458y+5832=0$; divide all by 81, which may be done without a fraction, and you will have $yy-18y+72=0$; which equation being reſolved, either by the general theorem or any other way, gives $y=6$, or 12; and ſince the equation will be the ſame, whichſoever of the two middle terms y ſtands for, it follows, that the two middle terms are 6 and 12; whence the extreme next to 6 is 3, and that next to 12 is 24; and the numbers are either 3, 6, 12, and 24, or 24, 12, 6, and 3, for either way they will anſwer the conditions of the problem.

PROBLEM

Problem 86.

129. *There are three numbers in continual proportion, whoſe ſum is nineteen, and the ſum of their ſquares one hundred thirty-three: What are the numbers?*

Solution.

For the three numbers ſought put x, y and z; then ſince, by the firſt condition, x is to y as y is to z, by multiplying extremes and means we have $yy=xz$; again, by the ſecond condition of the problem, we have $x+y+z=19$, and $19-y=x+z$, and (ſquaring both ſides) $361-38y+yy=xx+2xz+zz$; ſubtract yy from one ſide of the equation, and its equal xz from the other, and you will have $361-38y=x^2+xz+z^2=x^2+y^2+z^2=133$ by the third condition of the problem: having thus expunged both x and z at once, reſolve the equation $361-38y=133$, and you will have y the middle term equal to 6, and $19-y$, or the ſum of the extremes, $=13$; therefore the problem propoſed is now reduced to this, *viz. Of three numbers in continual proportion, whereof ſix the middle term, and thirteen the ſum of the extremes, are given, to find the extremes:* this problem is of the ſame nature with that in art. 112, and, being reſolved, gives 4 and 9 for the extremes; therefore the three numbers ſought are 4, 6, and 9, or 9, 6, and 4.

Problem 87.

130. *To find two numbers ſuch, that their difference multiplied into the difference of their ſquares ſhall make thirty-two, but their ſum multiplied into the ſum of their ſquares ſhall make two hundred ſeventy-two.*

Solution.

For the two numbers ſought put x and y; and the firſt fundamental equation will be $\overline{x-y}\times\overline{x^2-y^2}$, or $\overline{x-y}\times\overline{x-y}\times\overline{x+y}$, or $\overline{x^2-2xy+y^2}\times\overline{x+y}=32$; therefore

Equ.

Equ. 1ſt, $x^2-2xy+y^2=\frac{32}{x+y}$.

The ſecond fundamental equation is, $\overline{x+y}\times\overline{x^2+y^2}=272$; therefore

Equ. 2d, $x^2+y^2=\frac{272}{x+y}$.

From twice the ſecond equation ſubtract the firſt, that is, from $2x^2+2y^2=\frac{544}{x+y}$

ſubtract $x^2-2xy+y^2=\frac{32}{x+y}$

and you will have $x^2+2xy+y^2=\frac{512}{x+y}$,

that is, $\overline{x+y}^2=\frac{512}{x+y}$; therefore $\overline{x+y}^3=512$, and $x+y=\sqrt[3]{512}$, or the cube root of $512=8$: thus we have got the ſum of the two numbers ſought, to wit, 8; whence their difference may be found by the firſt equation, thus; $x^2-2xy+yy=\frac{32}{x+y}$, that is, $\overline{x-y}^2=\frac{32}{8}=4$; therefore $x-y$, or the difference of the two numbers ſought, equals 2; therefore the problem propoſed is now reduced to this; *Having given eight the ſum, and two the difference of the two numbers* x *and* y, *to find thoſe numbers*; and by art. 26 we ſhall have $x=5$, and $y=3$; which numbers will anſwer the conditions of the queſtion.

N. B. After we had found $x+y$, the ſum of the numbers equal to 8, we might have found the ſum of their ſquares by the ſecond equation, which gave $x^2+y^2=\frac{272}{x+y}=\frac{272}{8}=34$; and then the problem would have been reduced to this; *What two numbers are thoſe, whoſe ſum is eight, and the ſum of their ſquares thirty-four?*

four? which would have produced a quadratic equation, as in art. 113, whose two roots would have been 5 and 3, as before.

PROBLEM 88.

131. *To find two numbers such, that their difference added to the difference of their squares may make fourteen, and their sum added to the sum of their squares may make twenty-six.*

SOLUTION.

For the two numbers sought put x and y, and you will have the two following equations;

Equ. 1st, $x-y+x^2-y^2=14$.

Equ. 2d, $x+y+x^2+y^2=26$.

Add these two equations together, and you will have $2xx+2x=40$, $xx+x=20$, and $x=+4$, or -5; again, subtract the first equation from the second, and you will have $2yy+2y=12$, $yy+y=6$, and $y=+2$, or -3; and as these two values of y were obtained without any manner of dependence upon those of x, it is plain that either of the values of x may be joined with either of the values of y; and so we have no fewer than four pairs of numbers which will equally satisfy the conditions of the equations, to wit, $+4$ and $+2$, $+4$ and -3, -5 and $+2$, -5 and -3; but it is the first pair only, which, consisting of affirmative numbers, is proper for the solution of the problem, thus; the difference of 4 and 2 is 2, the difference of their squares 12, and $2+12=14$; again, the sum of 4 and 2 is 6, the sum of their squares 20, and $6+20=26$: let us see however how the other pairs will satisfy the conditions of the equations; make then x equal to 4, y, that is, $+y=-3$, and you will have $-y=+3$; whence $x-y=4+3=7$, $x^2-y^2=16-9=7$, and $7+7=14$; again, $x+y=4-3=1$, and $x^2+y^2=16+9=25$, and $1+25=26$: in the next place, make $x=-5$, and $y=+2$, then we shall

have $x-y=-5-2=-7$, $x^2-y^2=25-4=21$, and $-7+21=14$; again, $x+y=-5+2=-3$, and $x^2+y^2=25+4=29$, and $-3+29=26$: laſtly, make $x=-5$, and $y=-3$, and you will have $x-y=-5+3=-2$, and $x^2-y^2=25-9=16$, and $-2+16=14$; again, $x+y=-5-3=-8$, and $x^2+y^2=25+9=34$, and $-8+34=26$.

Problem 89.

132. *What two numbers are thoſe, whoſe ſum, when added together, is equal to their product when multiplied together; and this ſum or product, when added to the ſum of their ſquares, makes twelve?*

Solution.

For the two numbers ſought put x and y, and the fundamental equations will be 1ſt, $x+y=xy$; and ſecondly, $x+y+x^2+y^2=12$: in the firſt of theſe fundamental equations, where $x+y=yx$, we have $yx-x=y$; but $yx-x$ is the product of $y-1\times x$, or of $x\times\overline{y-1}$; therefore $x\times\overline{y-1}=y$, and $x=\frac{y}{y-1}$; but if inſtead of x, this value be ſubſtituted into the ſecond fundamental equation, the equation will riſe to a biquadratic, for the reſolution whereof no rules have hitherto been given; therefore, to extricate ourſelves out of this difficulty, it will be proper to have recourſe to ſome other artifice, by trying other poſitions, as thus; for the ſum of the two numbers ſought put z; then will z be alſo the product of their multiplication, by the ſuppoſition; and ſince this product z added to the ſum of their ſquares gives 12, the ſum of their ſquares will be $12-z$; but every one knows, that if to the ſum of the ſquares of any two numbers be added their double product, there will ariſe the ſquare of their ſum; therefore $12-z+2z$, or $12+z=z^2$; which equation being reſolved, gives $z=+4$, &c.;

&c.; and therefore the queſtion is now reduced to this; *What two numbers are thoſe, whoſe ſum is four, and the product of whoſe multiplication is four?* for the numbers ſought, put x and $4-x$, and you will have $4x-xx=4$; and changing the ſigns, $xx-4x=-4$; and compleating the ſquare, $xx-4x+4=0$; and extracting the ſquare root, $x-2=\pm 0$; whence $x=2$, or 2, for the roots of this equation are equal; therefore 2 and 2 are the numbers deſired in the queſtion; and they will anſwer the conditions; for in the firſt place, $2+2=4=2\times 2$; and in the next place, 4 the ſum of 2 and 2, being added to 8, the ſum of their ſquares, gives 12.

Corollary.

From our firſt attempt to ſolve this problem we may learn thus much however, that if any number whatever be made equal to y, then theſe two numbers y and $\frac{y}{y-1}$ will always have this property, that their ſum when added together will be equal to their product when multiplied together; thus if $3=y$, and conſequently $\frac{3}{2}=\frac{y}{y-1}$, we ſhall have $3+\frac{3}{2}=4\frac{1}{2}$, and $3\times\frac{3}{2}$ or $\frac{9}{2}=4\frac{1}{2}$; whence it follows, that this problem cannot be ſolved in whole numbers in any other caſe than that we have here put.

Problem 90.

133. *What two numbers are thoſe, whoſe ſum added to the product of their multiplication makes thirty-four, and the ſame ſum ſubtracted from the ſum of their ſquares leaves forty-two.*

Solution.

Here, to avoid all difficulties that would otherwiſe ariſe, put z for the ſum of the two numbers ſought; then, ſince this ſum added to the product of their

multiplication makes 34, the product of their multiplication will be $34-z$; but this sum z subtracted from the sum of their squares, leaves 42; therefore the sum of their squares is $42+z$; to this add their double product $68-2z$, and you will have $110-z=z^2$; whence $z=+10$, *&c.* and $34-z=24$; therefore now the question is, *What two numbers are those, whose sum is ten, and the product of their multiplication twenty-four?* and by art. 111, the two numbers sought are 4 and 6.

Whoever would see more questions of this nature, may consult *Bachet's* comment upon the 33d question of the first book of *Diophantus's* Arithmetics.

N. B. Having now done with quadratic equations, at least for a time, it may perhaps be expected that, according to order of method I should proceed on to equations of higher forms: but I shall take the liberty for once to dispense with that method; not but that I intend (God willing) to treat fully and distinctly of these equations hereafter; but in the mean time I think it more advisable to employ the reader's thoughts in some other things, which I take be of much greater importance, and more proper for his information.

THE

ELEMENTS of ALGEBRA.

BOOK IV.

Of general problems, and general theorems deduced from them; together with the manner of applying and demonſtrating theſe theorems ſynthetically.

The deſign of this fourth book more fully explained.

Art. 134. HITHERTO my young Analyſt has been indulged for the moſt part in a ſort of mixt Algebra, where letters were put only for unknown quantities: but if he would reaſon abſtractedly upon his problems, and draw general concluſions from them, he muſt put letters not only for his unknown quantities, but alſo for ſuch as are known; and ſo propoſe and ſolve his problems indefinitely. By this means, in the firſt place, he will obtain indefinite anſwers, which in many caſes are much preferable to more particular ones, as they ſuit and ſolve all particular caſes to which they are applicable; and in the next place he will be able to prove his work ſynthetically; which will not only confirm his former *analyſis*, but

but will alſo further inure and reconcile him to the operations of ſymbolical or ſpecious Arithmetic; and ſo render him entire maſter of this ſort of computation. A ſufficient ſpecimen of this ſort of reaſoning, both in the analytical and ſynthetical way, has already been given in our general theorem for the reſolution of a quadratic equation, ſo that no more needs be ſaid by way of preparation; it remains therefore now, that we look back upon ſome of the problems already ſolved, and ſhew how to ſolve them over again in general terms, as follows:

PROBLEM 1. (See art. 26.)

135. *What two numbers are thoſe, whoſe ſum is* a, *and difference* b?

SOLUTION.

Put x for the leſs number; then will the greater be $x+b$, and their ſum $2x+b=a$; whence $2x=a-b$, and x (the leſs number) will be $\frac{a-b}{2}$; whence $x+b$, (the greater number) will be $\frac{a-b}{2}+\frac{b}{1}=\frac{a-b+2b}{2}$ $=\frac{a+b}{2}$; ſo the greater number is found to be $\frac{a+b}{2}$, and the leſs $\frac{a-b}{2}$; where a and b are left undetermined till ſome particular caſe of this problem is propoſed to be compared with the general one; and then the quantities a and b will not only be determined in that caſe, but the problem may be ſolved by the general theorem without any further *analyſis*. As for example, let it be propoſed, as in art. 26, to find two numbers whoſe ſum is 48, and difference 14: here it is plain that a in the general problem anſwers to 48 in the particular caſe, and b to 14; whence $\frac{a+b}{2}$ (or the greater number) $=\frac{48+14}{2}=\frac{62}{2}=31$,

and $\frac{a-b}{2}$ (or the leſs number) $= \frac{48-14}{2} = \frac{34}{1} =$ 17; ſo that the numbers ſought are 31 and 17; which will anſwer the conditions of the queſtion. Again, ſuppoſe we were to find two numbers whoſe ſum is 35, and whoſe difference is 9: in this caſe it is plain that a and b have other ſignifications; for here $a=35$, and $b=9$, and therefore $\frac{a+b}{2}$ (or the greater number) will be 22, and $\frac{a-b}{2}$ (or the leſs number) will be 13.

Theſe theorems are capable of being tranſlated out of Algebraic language into any other; though to no great purpoſe that I know of, to ſuch as underſtand any thing of ſymbolical Arithmetic; for, in my opinion, they appear much more diſtinct as they are, and leſs liable to ambiguity. The foregoing problem, together with the anſwer belonging to it, being tranſlated into common Engliſh, will ſtand thus:

PROBLEM.

It is required, having given the ſum and difference of any two numbers, to find the numbers themſelves.

Anſ. 1ſt. *Add the difference to the ſum, and half the aggregate will be the greater number.* 2dly, *Subtract the difference from the ſum, and half the remainder will be the leſs number.*

That this is a true tranſlation, is plain: for what is $\frac{a+b}{2}$ but half the aggregate of the ſum and difference added together? and what is $\frac{a-b}{2}$ but half the remainder, after the difference is ſubtracted from the ſum?

We come now, in the laſt place, to examine this theorem as it ſtands in general terms, and to try whe-

ther it will anſwer the conditions of the problem in the letters themſelves. It was propoſed to find two numbers, whoſe ſum is a, and whoſe difference is b; and the anſwer was, that the greater number was $\frac{a+b}{2}$, and the leſs $\frac{a-b}{2}$; now that this is a true anſwer, will be evident from a bare addition and ſubtraction of the numbers themſelves, without any other principles; for if $\frac{a+b}{2}$ be added to $\frac{a-b}{2}$, their ſum will be $\frac{2a}{2}$ or a, which anſwers the firſt condition of the problem; and if $\frac{a-b}{2}$ be ſubtracted from $\frac{a+b}{2}$, the remainder will be $\frac{2b}{2}$ or b, which anſwers the ſecond condition.

This is that which is called a ſynthetical demonſtration, and doubtleſs ſhews the truth of the theorem to which it belongs, as well as the *analyſis* whereby that theorem was inveſtigated; but not ſo much to the ſatisfaction of the mind: for a ſynthetical demonſtration only ſhews that a propoſition is true; whereas an analytical one ſhews not only that a propoſition is true, but why it is ſo; places you in the condition of the inventor himſelf, and unveils the whole myſtery. Synthetical demonſtrations uſually require fewer principles than analytical ones, as will evidently appear, by comparing both, in this very example; and this I take to be the reaſon why the ancients, generally ſpeaking, choſe to demonſtrate their propoſitions this way; not with a deſign to conceal their *analyſis*, as ſome have, unjuſtly enough, imagined; but becauſe this ſort of demonſtration required fewer principles to proceed upon, and thoſe too, ſuch as were commonly known.

PROBLEM 2.

136. *What three numbers are thoſe, whereof the ſum of the firſt and ſecond is* a, *that of the firſt and third* b, *and that of the ſecond and third* c?

SOLUTION.

Put x for the firſt number ſought; then will the ſecond number be $a-x$, becauſe the firſt and ſecond numbers together make a; for a like reaſon the third number will be $b-x$, becauſe the firſt and third together make b: add now the ſecond and third numbers together, and you will have $a+b-2x=c$; therefore $2x+c=a+b$; therefore $2x=a+b-c$; and x (or the firſt number) $=\frac{a+b-c}{2}$; ſubtract now the firſt number $\frac{a+b-c}{2}$ from a, or, which is all one, add $\frac{-a-b+c}{2}$ to a, and you will have the ſecond number equal to $\frac{-a-b+c}{2}+\frac{a}{1}=\frac{-a-b+c+2a}{2}=\frac{a-b+c}{2}$; again, ſubtract the firſt number $\frac{a+b-c}{2}$ from b, and you will have the third number equal to $\frac{-a-b+c}{2}+\frac{b}{1}=\frac{-a+b+c}{2}$; and thus we have all the three numbers ſought, to wit,

The firſt, $\frac{a+b-c}{2}$,

The ſecond, $\frac{a-b+c}{2}$,

The third, $\frac{-a+b+c}{2}$.

To apply this general ſolution to ſome particular caſe, I ſhall make uſe of that in art. 42, where it was required

required to find three ſuch numbers, that the ſum of the firſt and ſecond may make 60, that of the firſt and third 80, and that of the ſecond and third 92; in this caſe it is plain that $a=60$, $b=80$, and $c=92$; therefore $\frac{a+b-c}{2}$ or the firſt number will be 24; $\frac{a-b+c}{2}$ or the ſecond number will be 36; and $\frac{-a+b+c}{2}$ or the third number will be 56; which numbers upon tryal will be found to be ſuch as the problem requires. But that the theorems here given are not only true in this particular caſe, but are univerſally ſo, will beſt appear from the ſynthetical demonſtration following.

1ſt, The firſt number $\frac{a+b-c}{2}$, and the ſecond number $\frac{a-b+c}{2}$ being added together make $\frac{2a}{2}$ or a, according to the firſt condition, the other quantities deſtroying one another.

2dly, The firſt number $\frac{a+b-c}{2}$, and the third number $\frac{-a+b+c}{2}$ being added together make $\frac{2b}{2}$ or b, according to the ſecond condition.

Laſtly, The ſecond number $\frac{a-b+c}{2}$ and the third number $\frac{-a+b+c}{2}$ being added together make $\frac{2c}{2}$ or c, according to the third condition.

This problem may alſo be ſolved ſomewhat more elegantly thus: put s for the unknown ſum of all the three numbers ſought: then if c, the ſum of the ſecond and third numbers, be ſubtracted from s, the ſum of all three, there will remain the firſt number

equal to $s-c$; in like manner b, the ſum of the firſt and third numbers, ſubtracted from s, the ſum of all three, leaves the ſecond number equal to $s-b$; and a, the ſum of the firſt and ſecond numbers, ſubtracted from s, the ſum of all three, leaves the third number equal to $s-a$; add now all theſe three numbers together, to wit, $s-c$, $s-b$ and $s-a$, and the ſum will be $3s-a-b-c$; but the ſum is s, by the ſuppoſition; therefore, $3s-a-b-c=s$; and $s=\frac{a+b+c}{2}$, whence we have the following theorem:

Make $\frac{a+b+c}{2}=s$; *then if the numbers* a, b *and* c *be taken backwards, and ſubtracted ſeverally from* s, *the three remainders* $s-c$, $s-b$, *and* $s-a$ *will be the three numbers ſought, in order as they are ſuppoſed in the problem.* Thus if $a=60$, $b=80$, and $c=92$, as before, we ſhall have $\frac{a+b+c}{2}$ or $s=116$; whence the firſt number will be $116-92$ or 24, the ſecond $116-80$ or 36, and the third $116-60$ or 56.

Scholium.

What three numbers are thoſe, whereof the product of the firſt and ſecond is a, *that of the firſt and third* b, *and that of the ſecond and third* c?

Solution.

Put p for the product of all the three numbers; then ſince c is the product of the two laſt, we ſhall have the firſt number equal to $\frac{p}{c}$; for a like reaſon the ſecond equals $\frac{p}{b}$, and the third equals $\frac{p}{a}$, and the product of all three equals $\frac{p^3}{abc}=p$; therefore $p^2=abc$, and $p=\sqrt{abc}$.

Demon-

DEMONSTRATION.

$\frac{p}{c} \times \frac{p}{b}$, or the product of the first and second numbers, is, $\frac{p^2}{bc} = \frac{abc}{bc} = a$: and so of the rest.

PROBLEM. 3.

137. *It is required to find two numbers whose difference is* b, *and the difference of whose squares is* a.

SOLUTION.

Put x for the less number, and consequently $x+b$ for the greater; then will the square of the less number be xx, that of the greater $xx+2bx+bb$, and the difference of their squares $2bx+bb=a$; therefore $2bx=a-bb$, and x (the less number) $=\frac{a-bb}{2b}$; whence $x+b$ (the greater) $=\frac{a-bb}{2b}+\frac{b}{1}=\frac{a-bb+2bb}{2b}=\frac{a+bb}{2b}$.

To apply this general solution, let it be required to find two numbers whose difference is 4, and the difference of whose squares is 112; here $a=112$, $b=4$, $bb=16$, $\frac{a-bb}{2b}=12$, $\frac{a+bb}{2b}=16$; therefore the numbers are 12 and 16. The general demonstration is as follows: if the less number $\frac{a-bb}{2b}$ be subtracted from the greater $\frac{a+bb}{2b}$, their difference will be $\frac{2bb}{2b}$ or b, according to the first condition of the problem; again, the square of the less number $\frac{a-bb}{2b}$ is

$\frac{aa-}{}$

$\frac{aa-2abb+b^4}{4bb}$, and the ſquare of the greater $\frac{a+bb}{2b}$ is $\frac{aa+2ab^2+b^4}{4bb}$; ſubtract the ſquare of the leſs from that of the greater, and you will have the difference of their ſquares $=\frac{4abb}{4bb}=a$, as the ſecond condition requires.

Problem 4.

138. *Let* r *and* s *be two given multiplicators, whereof* r *is the greater; it is required to divide a given number as* a *into two ſuch parts, that the greater part when multiplied into the leſs multiplicator may be equal to the leſs part when multiplied by the greater multiplicator.*

Solution.

Put x for the greater part, and $a-x$ for the leſs; then will the greater part multiplied into the leſs multiplicator be sx, and the leſs part multiplied into the greater multiplicator will be $ar-rx$: but according to the problem, theſe products are to be equal; therefore $sx=ar-rx$, and $rx+sx=ar$, but $rx+sx$ is $x\times\overline{r+s}$; therefore $x+r+s=ar$; and x (the greater of the two parts ſought) $=\frac{ar}{r+s}$; whence $a-x$, (the leſs part) equal $\frac{a}{1}-\frac{ar}{r+s}=\frac{ar+as-ar}{r+s}$ $=\frac{as}{r+s}$; ſo the greater part ſought is $\frac{ar}{r+s}$, and the leſs $\frac{as}{r+s}$.

The Application.

To apply this canon, let it be required to divide 84 into two ſuch parts, that five times one part may be

be equal to seven times the other: here $a=84$, r the greater multiplicator $=7$, $s=5$, $\frac{ar}{r+s}=\frac{7\times84}{12}=49$, $\frac{as}{r+s}=\frac{5\times84}{12}=35$; therefore the greater part is 49, and the less 35; and they will answer the conditions; for first, $49+35=84$; and secondly, $49\times5=245=35\times7$. Again, let it be required to divide 99 into two such parts, that $\frac{2}{3}$ of one part may be equal to $\frac{4}{5}$ of the other: here $a=99$, $r=\frac{4}{5}$, $s=\frac{2}{3}$, $r+s=\frac{22}{15}$, $\frac{r}{r+s}=\frac{\frac{4}{5}}{\frac{22}{15}}=\frac{6}{11}$, $\frac{s}{r+s}=\frac{\frac{2}{3}}{\frac{22}{15}}=\frac{5}{11}$, $\frac{ar}{r+s}=99\times\frac{6}{11}=54$, $\frac{as}{r+s}=99\times\frac{5}{11}=45$; so the two parts are 54 and 45; which is true; for first, $54+45=99$; and secondly, $\frac{2}{3}$ of $54=36=\frac{4}{5}$ of 45.

As to the demonstration of this general solution, it must be observed that in this problem there are two conditions; first, that the two parts, when added together, must make a; and secondly, that the greater part multiplied into the less multiplicator must be equal to the less part multiplied into the greater multiplicator: as to the first of the conditions, it is certain that the parts $\frac{ar}{r+s}$ and $\frac{as}{r+s}$ when added together will make $\frac{ar+as}{r+s}$; but $ar+as=a\times\overline{r+s}$, therefore $\frac{ar+as}{r+s}=a\times\frac{r+s}{r+s}=a\times1=a$: as to the second condition, if the greater part $\frac{ar}{r+s}$ be multiplied into s, the less multiplicator, the product will be $\frac{ars}{r+s}$; and again, if the less part $\frac{as}{r+s}$ be multiplied into r, the greater multiplicator, the product will

will also be $\frac{ars}{r+s}$; therefore the two products are equal, as the problem requires; and so the conditions are both satisfied. *Q. E. D.*

N. B. If any one has a mind to throw the foregoing theorem into words, it may easily be done, and in such a manner as almost to carry its own evidence along with it; for by the rule of proportion, $r+s$ is to r as a to $\frac{ar}{r+s}$; and $r+s$ is to s as a to $\frac{as}{r+s}$; therefore, *As the sum of the two multiplicators is to the greater or less multiplicator, so is the sum of the two parts sought to the greater or less part*: and this, I say, is pretty evident; for had $r+s$ been the number to be divided, the parts would certainly have been r and s; therefore if a greater or less number than $r+s$ is to be divided, the parts ought to be greater or less than r and s in the same proportion.

Problem. 5.

139. *Let* r *and* s *be two given multiplicators, whereof* r *is the greater; it is required to divide a given number as* a *into two such parts, that* r *times one part being added to* s *times the other may make some other given number, as* b.

Solution.

Put x for the part that is to be multiplied by r, and consequently $a-x$ for the other part that is to be multiplied by s, and the products will be rx and $as-sx$, and their sum will be $rx+as-sx=b$; therefore $rx-sx=b-as$, that is, $x \times r-s=b-as$; therefore x (the part to be multiplied by r) $=\frac{b-as}{r-s}$; therefore $a-x$ (the part to be multiplied by s) $=\frac{a}{1}-\frac{b+as}{r-s}=\frac{ar-as-b+as}{r-s}=\frac{ar-b}{r-s}$.

The

The APPLICATION.

Let it be required to divide 20 into two ſuch parts, that three times one part being added to five times the other may make 84: here $a=20$, $b=84$, $r=5$, $s=3$, $as=60$, $b-as=24$, $\frac{b-as}{r-s}$ (or the part to be multiplied by 5) $=\frac{24}{2}=12$, $ar=100$, $ar-b=16$; $\frac{ar-b}{r-s}$ (or the part to be multiplied by 3) $=\frac{16}{2}=8$; therefore the parts ſought are 8 and 12; for firſt, $8+12=20$; and ſecondly, three times $8+$five times $12=84$.

Again, let it be required to divide 100 into two ſuch parts, that $\frac{3}{4}$ of one part being ſubtracted from $\frac{5}{6}$ of the other, may leave 39: here it muſt be obſerved, that to ſubtract $\frac{3}{4}$ of any one quantity from another, is the ſame as to add $\frac{-3}{4}$ of it; therefore this problem when reduced to the form of the general one, will ſtand thus: *To divide a hundred into two ſuch parts, that* $\frac{-3}{4}$ *of one part being added to* $+\frac{5}{6}$ *of the other may make thirty-nine.* Here $a=100$, $b=39$, $r=\frac{5}{6}$, $s=\frac{-3}{4}$, $r-s=\frac{5}{6}+\frac{3}{4}=\frac{19}{12}$, $as=\frac{-300}{4}=-75$, $b-as=39+75=114$, $\frac{b-as}{r-s}=\frac{114}{\frac{19}{12}}=72$, $ar=\frac{500}{6}=\frac{250}{3}$, $ar-b=\frac{250}{3}-\frac{39}{1}=\frac{133}{3}$, $\frac{ar-b}{r-s}=\frac{\frac{133}{3}}{\frac{19}{12}}=28$; ſo the two parts are 28 and 72: for $28+72=100$; and moreover $\frac{3}{4}$ of 28, that

that is, 21, ſubtracted from $\frac{1}{4}$ of 72, that is, from 60, leaves 39.

The GENERAL DEMONSTRATION.

The two parts $\frac{ar-b}{r-s}$ and $\frac{b-as}{r-s}$ when added together, make $\frac{ar-b+b-as}{r-s} = \frac{ar-as}{r-s} = a \times \frac{r-s}{r-s} = a$: again, the part $\frac{b-as}{r-s}$ being multiplied into r, its proper multiplicator, gives $\frac{br-ars}{r-s}$, and the other part $\frac{ar-b}{r-s}$, multiplied into the other multiplicator s, gives $\frac{ars-bs}{r-s}$; add theſe two products together, and they will make $\frac{br-ars+ars-bs}{r-s} = \frac{br-bs}{r-s} = b$.

Q. E. D.

If any one hereafter ſhall think me too conciſe in the ſolutions of theſe general problems, he muſt have recourſe to the particular ones in the articles I ſhall refer him to, which he will find explained more at large: and as to the application of theſe general ſolutions to thoſe partieular caſes, it is to be preſumed that by this time the learner will be able in ſome meaſure to perform that part himſelf; and therefore I ſhall for the future leave it to him, except where I ſhall think my aſſiſtance may be of any uſe.

PROBLEM 6. (See art. 35.)

140. *One meeting a company of beggars, gives to each* p *pence, and has* a *pence over; but if he would have given them* q *pence apiece, he would have found he had wanted* b *pence for that purpoſe: What was the number of perſons?*

SOLUTION.

The number of perſons, x.

Pence given, px.

Pence in all, $px+a$.

The pence that would have been given upon the other ſuppoſition, qx.

Another expreſſion for the number of pence in all, $qx-b$.

Equ. $qx-b=px+a$; therefore $qx-px-b=a$; therefore $qx-px=a+b$; therefore x (the number of perſons) $=\frac{a+b}{q-p}$.

DEMONSTRATION.

If the number of perſons be $\frac{a+b}{q-p}$, then the pence given will be $\frac{ap+bp}{q-p}$, and the pence in all will be $\frac{ap+bp}{q-p}+\frac{a}{1}=\frac{ap+bp+aq-ap}{q-p}=\frac{aq+bp}{q-p}$: again the number of pence that would have been given upon the ſecond ſuppoſition is $\frac{aq+bq}{q-p}$; and therefore the other expreſſion for the number of pence in all will be $\frac{aq+bq}{q-p}-\frac{b}{1}=\frac{aq+bp}{q-p}$; and the perfect agreement between this account and the former is an infallible argument that the number of perſons was rightly aſſigned.

PROBLEM 7. (See art. 64.)

141. *It is required to divide a given number as a into two ſuch parts, that one part may be to the other as r to s.*

SOLUTION.

SOLUTION.

The two parts ſought, x and $a-x$.

Proportion, x is to $a-x$ as r to s.

Equation, $sx = ar - rx$; therefore $rx+sx=ar$; therefore x (or the firſt number) $= \frac{ar}{r+s}$; therefore $a-x$ (or the ſecond number) $= \frac{a}{1} - \frac{ar}{r+s} = \frac{as}{r+s}$; therefore the two numbers are $\frac{ar}{r+s}$ and $\frac{as}{r+s}$.

DEMONSTRATION.

1ſt, The two numbers $\frac{ar}{r+s}$ and $\frac{as}{r+s}$ when added together make $\frac{ar+as}{r+s} = a$.

2dly, The firſt number $\frac{ar}{r+s}$ is to the ſecond number $\frac{as}{r+s}$ as ar is to as; becauſe throwing away the common denominator is no more in reality than multiplying both fractions by it; and every one knows, that the multiplication of two quantities by the ſame number, makes no alteration in the proportion they bore one to the other: again, ar is to as (dividing both by a) as r to s; for it is well known that a common diviſion affects proportion no more than a common multiplication: ſince then the firſt number is to the ſecond as ar to as, and ar is to as as r to s, it follows, that the firſt number is to the ſecond as r to s. *Q. E. D.*

PROBLEM 8. (See art. 66.)

142. *What number is that, which being ſeverally added to two given numbers,* a *a greater number, and* b *a leſs, will make the former ſum to the latter as* r *to* s? *therefore* r *muſt be greater than* s?

SOLUTION.

SOLUTION.

The number ſought, x.

Proportion, $a+x$ is to $b+x$ as r to s.

Equation, $br+rx=as+sx$; therefore $br+rx-sx=as$; therefore $rx-sx=as-br$; therefore $x=\frac{as-br}{r-s}$.

DEMONSTRATION.

The number $\frac{as-br}{r-s}$ being added to a, gives $\frac{ar-br}{r-s}$ and the ſame number being added to b, gives $\frac{as-bs}{r-s}$; now $\frac{ar-br}{r-s}$ is to $\frac{as-bs}{r-s}$ as $ar-br$ is to $as-bs$, that is, as $r\times\overline{a-b}$ is to $s\times\overline{a-b}$, that is, as r to s. *Q. E. D.*

SCHOLIUM.

This problem was to find a number, which, being ſeverally added to a and b, will make the former ſum to the latter as r to s; let us now change the numbers a and b one for another, as alſo the numbers r and s one for another, and then the problem will ſtand thus: *To find a number, which, being ſeverally added to* b *and* a, *will make the former ſum to the latter as* s *to* r: but the condition of this problem is exactly the ſame with that of the former, and therefore the anſwer ought ſtill to be the ſame; that is, as changing a and b one for another, and r and s one for another, had no effect upon the problem, but left it entirely the ſame as at firſt; ſo if the expreſſion of the number ſought be juſt, the changing of a and b one for another, and of r and s one for another, ought to make no alteration in that expreſſion, and the number ſought ought ſtill to be the ſame; for truth will always be conſiſtent with herſelf. Let us try this however, and ſee what will be the effect of ſuch a

change: now the number ſought was $\frac{as-br}{r-s}$; but upon this change, as becomes br, and br becomes as, and $r-s$ becomes $s-r$, and the whole expreſſion will be turned into this, $\frac{br-as}{s-r}$; but $\frac{br-as}{s-r}$ is the ſame as $\frac{as-br}{r-s}$; for changing the ſign of both the numerator and denominator of any fraction, no more affects the value of that fraction, than in diviſion the changing of the ſign both of the diviſor and dividend affects the value of the quotient: thus then we find, that the changing of a and b one for another, and of r and s one for another, no more affects the theorem for determining the number ſought, than it did the problem from whence it was derived.

Problem 9.

143. *It is required to divide a given number as* a *into two ſuch parts, that the exceſs of one part above another given number as* b, *may be to what the other wants of* b, *as* r *to* s; *ſuppoſing* r *greater than* s.

Solution.

Put x for the greater part, and $\overline{a-x}$ for the leſs; then the exceſs of x above b will be $x-b$; and the exceſs of b above $\overline{a-x}$ will be $x-a+b$, as appears by ſubtracting $\overline{a-x}$ from b; but by the problem, the former exceſs is to the latter as r to s; therefore $x-b$ is to $x-a+b$ as r to s; multiply extremes and means, and you will have $sx-bs=rx-ar+br$; therefore $rx-sx=ar-br-bs$, and x (the greater part) $=\frac{ar-br-bs}{r-s}$; therefore $a-x$ (the leſs part) $=\frac{a}{1}-\frac{ar+br+bs}{r-s}=\frac{br+bs-as}{r-s}$; ſo the greater part is

$ar-$

$\frac{ar-br-bs}{r-s}$, and the leſs part $\frac{br+bs-as}{r-s}$.

EXAMPLE.

Let it be required (as in art. 41,) to divide the number 48 into two ſuch parts, that one part may be three times as much above 20 as the other wants of 20: here $a=48$, $b=20$, $r=3$, $s=1$; for to ſay that the exceſs muſt be three times the defect, is no other than to ſay, that the exceſs muſt be to the defect as 3 to 1; the reſt is eaſy.

The GENERAL DEMONSTRATION.

1ſt, The greater part $\frac{ar-br-bs}{r-s}$, and the leſs part $\frac{br+bs-as}{r-s}$ being added together make $\frac{ar-as}{r-s}=a$: again, the exceſs of the greater part above b, is $\frac{ar-br-bs}{r-s}-\frac{b}{1}=\frac{ar-br-bs-br+bs}{r-s}=\frac{ar-2br}{r-s}$, and the exceſs of b above the leſs part, which is what the leſs part wants of b, is $\frac{b}{1}-\frac{br-bs+as}{r-s}=\frac{br-bs-br-bs+as}{r-s}=\frac{as-2bs}{r-s}$; therefore the exceſs of one part above b is to what the other wants of b, as $\frac{ar-2br}{r-s}$ is to $\frac{as-2bs}{r-s}$, that is, as $ar-2br$ is to $as-2bs$, that is, as $r\times\overline{a-2b}$ is to $s\times\overline{a-2b}$, or as r to s. *Q. E. D.*

PROBLEM 10. (See art. 55.)

144. *There are two places, whoſe diſtance from each other is* a, *and from whence two perſons ſet out at the ſame time with a deſign to meet, one travelling at the rate of* p *miles in* q *hours, and the other at the rate of* r *miles in* s *hours: I demand how long and how far each travelled before they met.*

SOLUTION.

The number of hours travelled by each, x.

Miles travelled by the firſt, $\frac{px}{q}$.

By the ſecond, $\frac{rx}{s}$.

By them both, $\frac{px}{q}+\frac{rx}{s}$.

Equation, $\frac{px}{q}+\frac{rx}{s}=a$; therefore $px+\frac{qrx}{s}=aq$; therefore $psx+qrx=aqs$; therefore x (or the number of hours travelled by each) $=\frac{aqs}{ps+qr}$: now to find how many miles the firſt travelled, ſay, if in q hours he travelled p miles, how many will he travel in a number of hours equal to $\frac{aqs}{ps+qr}$? for a fourth number, I multiply the third number $\frac{aqs}{ps+qr}$ by the ſecond p, and the product is $\frac{apqs}{ps+qr}$; this again I divide by the firſt number q, and the quotient is $\frac{aps}{ps+qr}$; for dividing the numerator divides the whole fraction: by the ſame way of reaſoning, the number of miles travelled by the other will be found to be $\frac{aqr}{ps+qr}$: therefore the whole number of miles travelled by them both is $\frac{aps+aqr}{ps+qr}=a$, which demonſtrates the ſolution.

EXAMPLE.

Let the diſtance of the two places be 154 miles; let the firſt travel at the rate of 3 miles in 2 hours, and

and the ſecond after the rate of 5 miles in 4 hours; then we ſhall have $a=154$, $p=3$, $q=2$, $r=5$, $s=4$, $ps=12$, $qr=10$, $ps+qr=22$, $\frac{aqs}{ps+qr}=\frac{154\times2\times4}{22}$ $=56$, $\frac{aps}{ps+qr}=\frac{154\times3\times4}{22}=84$, $\frac{aqr}{ps+qr}=\frac{154\times2\times5}{22}$ $=70$: therefore each travelled 56 hours; the firſt travelled 84 miles, and the other 70.

SCHOLIUM.

If in the foregoing problem we change p into r and q into s, and *vice verſa*, the conſequence will be, that the firſt traveller will now travel at the ſame rate as the ſecond did before, and the ſecond at the ſame rate as the firſt did before; but the motion whereby theſe two travellers approach towards each other will ſtill be the ſame, and therefore the time this motion is performed in, that is, the time that each travelled, muſt ſtill be the ſame: let us then make the changes abovementioned, firſt in the expreſſion of the time, and ſee whether that expreſſion will ſtill continue the ſame; then let us make the ſame changes in the two expreſſions of the miles, and ſee whether by this means theſe expreſſions will not be converted each into the other: firſt then, the expreſſion of the time, which is $\frac{aqs}{ps+qr}$, by changing p into r, and q into s, and *vice verſa*, becomes $\frac{asq}{rq+sp}$, which is the ſame as $\frac{aqs}{ps+qr}$; therefore the expreſſion of the time ſuffers no alteration by theſe changes: ſecondly, the number of miles travelled by the firſt was $\frac{aps}{ps+qr}$, which, after the changes abovementioned, becomes $\frac{arq}{rq+sp}$, which is the ſame as $\frac{aqr}{ps+qr}$, the miles travelled by the ſecond;

and therefore, *è converſo*, the expreſſion $\frac{aqr}{ps+qr}$ will be changed into the expreſſion $\frac{aps}{ps+qr}$; and thus will the caſe of the firſt traveller be changed into that of the ſecond, and *vice verſa*.

PROBLEM 15. (See art. 38.)

149. *What two numbers are thoſe, whereof the greater is to the leſs as* p *to* q, *and the product of their multiplication is to their ſum as* r *to* s?

SOLUTION.

Put x for the leſs number, and the greater will be found by ſaying, as q is to p, ſo is x the leſs number to $\frac{px}{q}$ the greater; whence their ſum will be $\frac{px}{q}+\frac{x}{1}=\frac{px+qx}{q}$: on the other hand, if the greater number $\frac{px}{q}$ be multiplied into x, the product will be $\frac{pxx}{q}$; therefore the product of theſe two numbers will be to their ſum as $\frac{pxx}{q}$ is to $\frac{px+qx}{q}$, that is, as px to $p+q$; but according to the problem, the product is to the ſum as r to s; therefore px is to $p+q$ as r to s; whence we have this equation, $psx=pr+qr$; and x (the leſs number ſought) $=\frac{pr+qr}{ps}$; therefore $px=\frac{pr+qr}{s}$; for dividing the denominator multiplies the whole fraction; therefore $\frac{px}{q}$ (or the greater number) $=\frac{pr+qr}{qs}$.

DEMON-

DEMONSTRATION.

1ſt, The greater number is to the leſs as $\frac{pr+qr}{qs}$ is to $\frac{pr+qr}{ps}$; divide $pr+qr$ by itſelf, and the quotient will be 1; ſo that we may now ſay, that the greater number is to the leſs as $\frac{1}{qs}$ is to $\frac{1}{ps}$, that is, as $\frac{1}{q}$ is to $\frac{1}{p}$, that is, as $\frac{p}{q}$ is to 1, that is, as p is to q.

2dly, The greater number $\frac{pr+qr}{qs}$ and the leſs $\frac{pr+qr}{ps}$ being added together make $\frac{pprs+pqrs+pqrs+qqrs}{pqss}$ $= \frac{pprs+2pqrs+qqrs}{pqss}$; but $pp+2pq+qq = \overline{p+q}^2$; therefore the ſum of the two numbers ſought is $\frac{rs\times\overline{p+q}^2}{pqss}$.

3dly, The greater number $\frac{pr+qr}{qs}$ multiplied into the leſs $\frac{pr+qr}{ps}$ produces $\frac{rr\times\overline{p+q}^2}{pqss}$.

4thly, Therefore the product of the two numbers ſought is to their ſum as $\frac{rr\times\overline{p+q}^2}{pqss}$ is to $\frac{r\times\overline{p+q}^2}{pqss}$, that is, as rr is to rs, or as r to s. *Q. E. D.*

PROBLEM 17.

151. *What two numbers are thoſe, the product of whoſe multiplication is* p, *and the quotient of the greater divided by the leſs is* q?

SOLUTION.

Put x for the greater number, and consequently $\frac{p}{x}$ for the less; then will the quotient of the greater divided by the less be $\frac{xx}{p}$; but, according to the problem, this quotient ought to be q; therefore $\frac{xx}{p} = q$; and $xx = pq$, and x (the greater number sought) $= \sqrt{pq}$: again, since $xx = pq$, we have $\frac{p\,p}{x\,x} = \frac{p\,p}{p\,q} = \frac{p}{q}$; and $\frac{p}{x}$ (or the less number sought) $= \sqrt{\frac{p}{q}}$; so that the greater of the two numbers sought is $\sqrt{pq}$, and the less $\sqrt{\frac{p}{q}}$.

EXAMPLE.

Let the product of the two numbers sought be 144, and the quotient of the greater divided by the less 16; then we shall have $p = 144$, $q = 16$, $pq = 144 \times 16$, $\sqrt{pq} = 12 \times 4 = 48$; $\frac{p}{q} = \frac{144}{16}$, $\sqrt{\frac{p}{q}} = \frac{12}{4} = 3$; therefore the numbers are 48 and 3.

DEMONSTRATION.

1st, pq multiplied into $\frac{p}{q}$ gives $\frac{p\,p\,q}{q} = pp$; therefore $\sqrt{pq}$ multiplied into $\sqrt{\frac{p}{q}}$ gives p.

2dly, pq being divided by $\frac{p}{q}$ gives $\frac{pqq}{p} = q\,q$; therefore $\sqrt{p\,q}$ being divided by $\sqrt{\frac{p}{q}}$ gives q. *Q. E. D.*

PROBLEM

PROBLEM 21. (See art. 130.)

155. *What two numbers are those, whose difference being multiplied into the difference of their squares will make* a, *and whose sum being multiplied into the sum of their squares will make* b?

SOLUTION.

For the two numbers sought put x and y; then according to the first supposition, $\overline{x-y}\times\overline{x^2-y^2}$, or $\overline{x-y}\times\overline{x-y}\times\overline{x+y}$, or $\overline{xx-2xy+y^2}\times\overline{x+y}=a$; therefore

Equ. 1st, $x^3-2xy+y^2=\frac{a}{x+y}$.

Again, according to the second supposition, $\overline{x+y}\times\overline{x^2+y^2}=b$; therefore

Equ. 2d, $x^2+y^2=\frac{b}{x+y}$.

From twice the second equation subtract the first,

that is, from $2x^2+2y^2=\frac{2b}{x+y}$

subtract $x^2-2xy+y^2=\frac{a}{x+y}$,

and there will remain $x^2+2xy+y^2=\frac{2b-a}{x+y}$,

that is, $\overline{x+y}^2=\frac{2b-a}{x+y}$; therefore $\overline{x+y}^3=2b-a$; make $2b-a=r^3$, that is, put r for the cube root of $2b-a$, and you will have

Equ. 3d, $x+y=r$.

Again, in the first equation we had $x^2-2xy+y^2=\frac{a}{x+y}=\frac{a}{r}$, that is, $\overline{x-y}^2=\frac{a}{r}$ make $\frac{a}{r}=ss$, that

is,

is, put s for the ſquare root of $\frac{a}{r}$, and you will have

Equ. 4th, $x-y=s$.

Add the third and fourth equations together, and you will have $2x=r+s$, and $x=\frac{r+s}{2}$; ſubtract the fourth equation from the third, and you will have $2y=r-s$, and $y=\frac{r-s}{2}$; whence we have the following canon:

Make $2b-a=r^3$, *and* $\frac{a}{r}=s^2$, *and the numbers ſought will be* $\frac{r+s}{2}$, *and* $\frac{r-s}{2}$.

DEMONSTRATION.

The difference of the numbers $\frac{r+s}{2}$ and $\frac{r-s}{2}$ is s, and the difference of their ſquares is rs, as is eaſily tried; therefore the difference of the numbers multiplied into the difference of their ſquares is $rss=\frac{ra}{r}=a$: again, the ſum of the numbers $\frac{r+s}{2}$ and $\frac{r-s}{2}$ is r, and the ſum of their ſquares is $\frac{r^2+s^2}{2}$; therefore the ſum of the numbers multiplied into the ſum of their ſquares is $\frac{r^3+rss}{2}$; but $r^3=2b-a$ by the canon, and $rss=a$ by the ſame; therefore the ſum of the numbers multiplied into the ſum of their ſquares is $\frac{2b-a+a}{2}=b$. *Q. E. D.*

PROBLEM

PROBLEM 22.

156. *Out of a common pack of fifty-two cards, let part be diſtributed into ſeveral diſtinct parcels or heaps in the manner following: upon the loweſt card of every heap let as many others be laid as are ſufficient to make up its number twelve; as, if four be the number of the loweſt card, let eight others be laid upon it; if five, let ſeven; if* a, *let twelve* — a, &c.: *It is required, having given the number of heaps, which we ſhall call* n, *as alſo the number of cards ſtill remaining in the dealer's hand, which we ſhall call* r. *to find the ſum of the numbers of all the bottom cards put together.*

SOLUTION.

Let a, b, c, &c. expreſs the number of the bottom card in the ſeveral heaps: then will $12-a$ expreſs the number of all the cards lying upon the bottom card of the firſt heap, that is, the number of all the cards of the firſt heap except the loweſt, will be $12-a$; therefore $13-a$ will be the number of all the cards in the firſt heap; for the ſame reaſon, $13-b$ will be the number of all the cards in the ſecond heap; and $13-c$ the number of all thoſe in the third, and ſo on; therefore the number of all the cards in all the heaps will be $13\times n-a-b-c$ &c.: make $a+b+c$ &c. (or the ſum of the number of all the bottom cards) $=x$, and then we ſhall have the numbers of all the cards drawn out into heaps $=13n-x$; but theſe, together with r, the number of cards undrawn out, make up the whole pack 52; therefore we have this equation, $13n-x+r=52$; therefore $x+52=13n+r$; therefore $x=13n-52+r$; but $52=13\times 4$; therefore $13n-52=13\times n-4$; therefore $x=13\times n-4+r$; in words thus; *From the number of heaps ſubtract four; multiply the reſt by thirteen; and this product, added to the number of cards ſtill remaining in the dealer's hand, will*

will give the ſum of the numbers of all the bottom cards put together: as for example, let there be three heaps, and thirty cards remaining; now 4 ſubtracted from 3 leaves —1; this multiplied by 13 gives —13, and this product added to 30, the number of cards remaining, gives 17 for the ſum of the numbers of all the bottom cards.

A more univerſal theorem is as follows;

Let n *be the number of heaps as before,* p *the number of cards in a pack; let as many cards be laid upon the loweſt of every heap as are ſufficient to make up its number* q; *and laſtly, let* r *be the number of remaining cards as before; and the ſum of the numbers of all the bottom cards will be found to be* $\overline{q+1} \times n + \overline{r-p}$.

PROBLEM 24. (See art. 111.)

158. *What two numbers are thoſe, whoſe ſum is* a, *and the product of whoſe multiplication is* b?

SOLUTION.

The two numbers ſought, x and $a-x$.

The product of their multiplication, $ax-xx=b$; whence, changing the ſigns, $xx-ax=-b$, and completing the ſquare, $xx-ax+\frac{aa}{4}=\frac{aa}{4}-b=\frac{aa-4b}{4}=\frac{ss}{4}$; extract the ſquare root of both ſides, that is, of $x^2-ax+\frac{aa}{4}$ on one ſide, and of $\frac{ss}{4}$ on the other, and you will have $x-\frac{a}{2}=\pm\frac{s}{2}$, and $x=\frac{a\pm s}{2}$; whence the following canon:

Make a a—4 b = s s, *and the greater number will be* $\frac{a+s}{2}$, *and the leſs number* $\frac{a-s}{2}$.

The

The SYNTHETICAL DEMONSTRATION.

1ſt, $\frac{a+s}{2}$ added to $\frac{a-s}{2}$ gives $\frac{2a}{2}$ or a.

2dly, $\frac{a+s}{2}$ multiplied into $\frac{a-s}{2}$ gives $\frac{aa-ss}{4}=$ (by ſubſtituting $-aa+4b$ inſtead of $-ss$) $\frac{aa-aa+4b}{4}$ $=\frac{4b}{4}=b$. *Q. E. D.*

An example to the foregoing canon.

What two numbers are thoſe, whoſe ſum is twenty-five, and the product of whoſe multiplication is 144? Here $a=25$, $b=144$, $aa-4b$ or $ss=49$, $s=7$, $\frac{a+s}{2}$ $=16$, $\frac{a-s}{2}=9$; ſo the numbers are 9 and 16.

PROBLEM 25. (See art. 113.)

159. *What two numbers are thoſe, whoſe ſum is* a, *and the ſum of their ſquares* b?

SOLUTION.

The two numbers ſought, x and $a-x$.
The ſquare of the former, xx.
The ſquare of the latter, $aa-2ax+xx$.
The ſum of their ſquares $aa-2ax+2xx=b$; therefore $2xx-2ax=b-aa$, and $xx-ax=\frac{b-aa}{2}$, and $xx-ax+\frac{aa}{4}=\frac{aa}{4}+\frac{b-aa}{2}=\frac{2b-aa}{4}=\frac{ss}{4}$; extract the ſquare roots, that is, the root of $xx-ax+\frac{aa}{4}$

on one ſide, and of $\frac{ss}{4}$ on the other, and you will have $x-\frac{a}{2}=\pm\frac{s}{2}$, and $x=\frac{a\pm s}{2}$; whence the following canon:

Make 2b—aa=ss, *and you will have* $\frac{a+s}{2}$ *for the greater number, and* $\frac{a-s}{2}$ *for the leſs.*

DEMONSTRATION.

1ſt, $\frac{a+s}{2}$ added to $\frac{a-s}{2}$ gives a.

2dly, The ſquare of $\frac{a+s}{2}$ is $\frac{aa+2as+ss}{4}$; the ſquare of $\frac{a-s}{2}$ is $\frac{aa-2as+ss}{4}$; and therefore the ſum of their ſquares is $\frac{2aa+2ss}{4}=\frac{aa+ss}{2}=$ (by the canon) $\frac{aa+2b-aa}{2}=b$. *Q. E. D.*

An example to the foregoing canon.

What two numbers are thoſe, whoſe ſum is 28, and the ſum of their ſquares 400? Here $a=28$, $b=400$, $2b-aa$ or $ss=16$, $s=4$. $\frac{a+s}{2}=16$, $\frac{a-s}{2}=12$; therefore the numbers are 12 and 16.

PROBLEM 26. (See art. 114.)

160. *What two numbers are thoſe, whoſe ſum is* a, *and the ſum of their cubes* b?

SOLUTION.

The two numbers ſought, x and $a-x$.

The cube of the former, x^3.

The

The cube of the latter, $a^3-3a^2x+3ax^2-x^3$.

The sum of their cubes, $a^3-3a^2x+3ax^2=b$; therefore $3ax^2-3a^2x=b-a^3$; divide by $3a$, and you will have $xx-ax=\frac{b-a^3}{3a}$, and $xx-ax+\frac{aa}{4}=\frac{aa}{4}+\frac{b-a^3}{3a}=\frac{4b-a^3}{12a}=\frac{1}{4}\times\frac{4b-a^3}{3a}=\frac{ss}{4}$; extract the square root of both sides, that is, of $xx-ax+\frac{aa}{4}$ on one side, and of $\frac{ss}{4}$ on the other, and you will have $x-\frac{a}{2}=\pm\frac{s}{2}$ and $x=\frac{a\pm s}{2}$; whence the following canon:

Make $\frac{4b-a^3}{3a}=ss$, *and you will have* $\frac{a+s}{2}$ *for the greater number, and* $\frac{a-s}{2}$ *for the less.*

DEMONSTRATION.

1st, $\frac{a+s}{2}$ added to $\frac{a-s}{2}$ gives a.

2dly, The cube of $\frac{a+s}{2}$ is $\frac{a^3+3a^2s+3as^2+s^3}{8}$, and the cube of $\frac{a-s}{2}$ is $\frac{a^3-3a^2s+3as^2-s^3}{8}$; therefore, the sum of their cubes is $\frac{2a^3+6as^2}{8}=\frac{a^3+3ass}{4}=\frac{a^3+4b-a^3}{4}$ by the canon, $=b$. *Q. E. D.*

An example to the foregoing canon.

What two numbers are those, whose sum is 7, and the sum of their cubes 133? Here $a=7$, $b=133$, $\frac{4b-a^3}{3a}$

$\frac{4b-a}{3a}$ or $ss=9$, $s=3$, $\frac{a+s}{2}=5$, $\frac{a-s}{2}=2$; so the numbers are 5 and 2.

Problem 27.

161. *It is required to find two numbers whose difference is* d, *and which, dividing a given number as* a, *will have two quotients whose difference is* b.

Solution.

The two numbers sought, x and $x+d$.

The two quotients $\frac{a}{x}$ and $\frac{a}{x+d}$.

Their difference, $\frac{a}{x}-\frac{a}{x+d}=\frac{ad}{xx+dx}=b$; therefore $bxx+bdx=ad$, and $xx+dx=\frac{ad}{b}$; therefore $xx+dx+\frac{dd}{4}=\frac{ad}{b}+\frac{dd}{4}=\frac{1}{4}\times\overline{\frac{4ad}{b}+dd}=\frac{ss}{4}$; extract the square root of $xx+dx+\frac{dd}{4}$ on one side, and of $\frac{ss}{4}$ on the other, and you will have $x+\frac{d}{2}=\pm\frac{s}{2}$, whence $x=\frac{s-d}{2}$ or $\frac{-s-d}{2}$; set aside the negative root, and you will have x (the less divisor) $=\frac{s-d}{2}$, and $x+d$ (the greater) $=\frac{s-d}{2}+\frac{d}{1}=\frac{s+d}{2}$; and we shall have the following canon.

Make $\frac{4ad}{b}+dd=ss$, *and you will have* $\frac{s+d}{2}$ *for the greater divisor, and* $\frac{s-d}{2}$ *for the less.*

N. B.

N. B. That $\frac{s-d}{2}$ is an affirmative quantity, is evident from hence, that $ss = \frac{4ad}{b} + dd$; therefore ss is greater than dd, and s greater than d; therefore $\frac{s-d}{2}$ is affirmative.

The demonſtration of the canon.

1ſt, If the leſs diviſor $\frac{s-d}{2}$ be ſubtracted from the greater $\frac{s+d}{2}$, the remainder will be d; therefore the difference of the diviſors is d.

2dly, If the dividend a be ſeverally divided by the two diviſors $\frac{s-d}{2}$ and $\frac{s+d}{2}$, the two quotients will be $\frac{2a}{s-d}$ and $\frac{2a}{s+d}$ reſpectively, whereof the former will be the greater, as having a leſs denominator; therefore the difference of the quotients is $\frac{2a}{s-d} - \frac{2a}{s+d} = \frac{2as+2ad-2as+2ad}{ss-dd} = \frac{4ad}{ss-dd} = \frac{4ad}{\frac{4ad}{b}}$ by the canon, $= b$. *Q. E. D.*

An example to the foregoing canon.

Let it be required to find two diviſors whoſe difference is 1, and which, dividing a given number as 144, will have two quotients whoſe difference is 2.

Here $a=144$, $b=2$, $d=1$, $\frac{4ad}{b} + dd$ or $ss = 289$,

$s=17, \frac{s+d}{2}=9, \frac{s-d}{2}=8$; therefore the diviſors are 8 and 9, and the quotients 18 and 16.

SCHOLIUM.

If in this laſt problem we had put x for the greater quantity, and $x-d$ for the leſs, the equation would have been $\frac{a}{x-d}-\frac{a}{x}=b$, or $\frac{ad}{xx-dx}=b$, which is different from the former; and therefore it could not be expected that, in that equation, the two roots ſhould be the numbers ſought, but rather the two different values of x, the leſſer of them.

PROBLEM 28. (See art. 118.)

162. *What number is that, which, being added to its ſquare root, will make a?*

SOLUTION.

Put xx for the number ſought, and you will have this equation, $xx+1x=a$; therefore $xx+1x+\frac{1}{4}=a+\frac{1}{4}=\frac{4a+1}{4}=\frac{ss}{4}$ therefore $x+\frac{1}{2}=\pm\frac{s}{2}$; therefore $x=\frac{s-1}{2}$ or $\frac{-s-1}{2}$: If x be made $=\frac{s-1}{2}$, you will have $xx=\frac{ss-2s+1}{4}$; if x be made equal to $\frac{-s-1}{2}$, you will have $xx=\frac{ss+2s+1}{4}$; whence the following canon:

Make $4a+1=ss$, *and the number ſought will be* $\frac{ss-2s+1}{4}$ or $\frac{ss+2s+1}{4}$, *according as the ſquare root to be added is taken affirmatively or negatively.*

DEMON-

DEMONSTRATION.

Case 1*ſt*, If to the number $\frac{ss-2s+1}{4}$ be added its affirmative ſquare root $\frac{s-1}{2}$, or $\frac{2s-2}{4}$, the ſum will be $\frac{ss-1}{4} = a$, by the canon.

Case 2*d*, If to the number $\frac{ss+2s+1}{4}$ be added its negative ſquare root $\frac{-s-1}{2}$ or $\frac{-2s-2}{4}$, the ſum will again be $\frac{ss-1}{4} = a$, as before. *Q. E. D.*

PROBLEM 31.

165. *What two numbers are thoſe, whoſe ſum added to the ſum of their ſquares is* a, *and whoſe difference added to the difference of their ſquares is* b?

SOLUTION.

Put x and y for the two numbers ſought, and the fundamental equations will be 1ſt, $x+y+x^2+y^2=a$; 2dly, $x-y+x^2-y^2=b$; which equations when reduced to order will ſtand thus;

Equ. 1ſt, $xx+x+yy+y=a$.
Equ. 2d, $xx+x-yy-y=b$.

Add theſe two laſt equations together, and you will have $2xx+2x=a+b$; whence $xx+1x=\frac{a+b}{2}$, and $xx+1x+\frac{1}{4}=\frac{a+b}{2}+\frac{1}{4}=\frac{2a+2b+1}{4}=\frac{rr}{4}$; extract the root of $xx+1x+\frac{1}{4}$ on one ſide, and of $\frac{rr}{4}$ on the other, and you will have $x+\frac{1}{2}=\frac{r}{2}$ and $x=\frac{r-1}{2}$: again, ſubtract the

ſecond equation from the firſt, and you will have $2y^2+2y=a-b$; and $y^2+y=\frac{a-b}{2}$, and $y^2+1y+\frac{1}{4}=\frac{2a-2b+1}{4}=\frac{ss}{4}$; whence $y+\frac{1}{2}=\frac{s}{2}$, and $y=\frac{s-1}{2}$; whence the following canon:

Make $2a+2b+1=rr$, *and* $2a-2b+1=ss$, *and you will have the greater number equal to* $\frac{r-1}{2}$, *and the leſs number* $=\frac{s-1}{2}$.

DEMONSTRATION.

The ſum of $\frac{r-1}{2}$ and $\frac{s-1}{2}$ is $\frac{r+s-2}{2}$, or $\frac{2r+2s-4}{4}$.

The ſquare of $\frac{r-1}{2}$ is $\frac{r^2-2r+1}{4}$.

The ſquare of $\frac{s-1}{2}$ is $\frac{s^2-2s+1}{4}$.

therefore the ſum of their ſquares is $\frac{r^2+s^2-2r-2s+2}{4}$; add to this the ſum of the numbers above found, to wit, $\frac{2r+2s-4}{4}$, and you will have the ſum of the numbers added to the ſum of their ſquares equal to $\frac{r^2+ss-2}{4}$; but $r^2+s^2=4a+2$ by the canon; therefore $rr+ss-2=4a$, and $\frac{r^2+s^2-2}{4}$, or the ſum of the numbers added to the ſum of their ſquares, equals a: again, the difference of $\frac{r-1}{2}$ and $\frac{s-1}{2}$ is

$r-$

$\frac{r-s}{2}$ or $\frac{2r-2s}{4}$; and the difference of their ſquares is $\frac{r^2-s^2+2s-2r}{4}$; therefore the difference of the numbers added to the difference of their ſquares is $\frac{r^2-s^2}{4}=\frac{4b}{4}$ by the canon, $=b$. *Q. E. D.*

An example to the foregoing canon.

Let the ſum of the numbers added to the ſum of their ſquares be 26, and their difference added to the difference of their ſquares 14; and we ſhall have $a=26$, $b=14$, $2a+2b+1$ or $rr=81$, $r=9$, $\frac{r-1}{2}=4$, $2a-2b+1$ or $ss=25$, $s=5$, $\frac{s-1}{2}=2$; and ſo the numbers ſought will be 4 and 2.

Problem 32.

166. *What two numbers are thoſe, the ſum of whoſe ſquares is* a, *and the product of their multiplication* b?

Solution.

For the two numbers ſought put x and $\frac{b}{x}$, and the ſum of their ſquares will be $x^2+\frac{b^2}{x^2}=a$; therefore $x^4+b^2=ax^2$; therefore $x^4-ax^2=-bb$, and $x^4-axx+\frac{aa}{4}=\frac{aa}{4}-bb=\frac{aa-4bb}{4}=\frac{ss}{4}$; extract the ſquare root of $x^4-ax^2+\frac{aa}{4}$ on one ſide, and of $\frac{ss}{4}$ on the other, and you will have $x^2-\frac{a}{2}=\pm\frac{s}{2}$, and $x^2=\frac{a\pm s}{2}$; and ſince this equation will be the ſame,

which ſoever of the unknown quantities x is made to ſtand for, you will have the following canon:

Make $aa-4bb=ss$, *and you will have the ſquare of the greater number equal to* $\frac{a+s}{2}$, *and the ſquare of the leſs equal to* $\frac{a-s}{2}$.

DEMONSTRATION.

If the ſquare of the greater number, which is $\frac{a+s}{2}$, be added to the ſquare of the leſs number, which is $\frac{a-s}{2}$, the ſum of their ſquares will be $\frac{2a}{2}$ or a: again, if the ſquare of the greater number, which is $\frac{a+s}{2}$, be multiplied into the ſquare of the leſs number, which is $\frac{a-s}{2}$, the product of theſe two ſquares will be $\frac{aa-ss}{4}=\frac{aa-aa+4bb}{4}$ by the canon, $=\frac{4bb}{4}=bb$; but if the ſquare of the greater number multiplied into the ſquare of the leſs gives bb, then the greater number multiplied into the leſs will give b. *Q. E. D.*

An example to the foregoing canon.

Let the ſum of the ſquares of the two numbers ſought be 400, and the product of their multiplication 192; then you will have $a=400$, $b=192$, a^2-4b^2 or $s^2=12544$, $s=112$, $\frac{a+s}{2}$ or the ſquare of the greater number $=256$, $\frac{a-s}{2}$ or the ſquare of the leſs number $=144$; therefore the greater number is 16, and the leſs 12.

THE

THE

ELEMENTS OF ALGEBRA.

BOOK V.

In what caſes a problem may admit of many anſwers.

Art. 168. IT has already been obſerved, that if in any problem the number of independent conditions be equal to the number of unknown quantities, ſuch a problem will admit but of one ſolution; or if it admits of more, they will however be ſo determined as to leave no room for arbitrary poſitions: but if the conditions be fewer in number than are the unknown quantities, thoſe that are wanting may then be ſupplied by the Analyſt himſelf at pleaſure; and as there is infinite choice, it is no wonder if in ſuch a caſe a problem admits of an infinite number of anſwers, eſpecially where fractions are taken into that number; but if the problem relates to whole numbers only, then the number of anſwers will ſometimes be finite and ſometimes infinite, as the nature of the problem will bear. This will be ſufficiently illuſtrated by the two following examples:

EXAMPLE 1.

Let it be required to find two numbers whose sum is equal to ten times their difference.

Here putting x and y for the two numbers sought, it is plain that in this case we have but one condition, and consequently but one equation, to wit, $x+y=10x-10y$, which equation being reduced, gives $x=\frac{11y}{9}$; and this is all the problem requires. Here then it is plain that the Analyst is entirely at liberty to substitute whatever whole number, mixt number, or proper fraction, he pleases for y, provided he does but make $x=\frac{11y}{9}$; and the two quantities x and y will solve the problem. As for instance, let $\frac{1}{2}$ be put for y; then will x or $\frac{11y}{9}$ be $\frac{11}{18}$, and those two fractions $\frac{11}{18}$ and $\frac{1}{2}$ or $\frac{9}{18}$ will solve the problem; for their difference is $\frac{1}{9}$, and their sum $\frac{10}{9}$. But if it be intended that x and y shall both be whole numbers, then such a whole number must be substituted for y as will admit of 9 for a divisor without a remainder: but of such whole numbers there is infinite choice, as 9, 18, 27, 36, *&c.*; therefore this question is capable of an infinite number of answers, both in whole numbers and fractions.

EXAMPLE 2.

Let it now be required to find two numbers x *and* y, *the product of whose multiplication is equal to ten times their difference.*

Here the equation will be $yx=10x-10y$, which being reduced, gives $x=\frac{10y}{10-y}$. Here it is plain that y must be less than 10; for if y was equal to 10, the

the fraction $\frac{10y}{10-y}$ would be infinite, as will be shewn in another place; and if y be greater than 10, then $10-y$, and consequently $\frac{10y}{10-y}$ will be a negative quantity, whereas the problem may be supposed to relate to affirmative quantities only: however, as there is infinite choice of fractions between 0 and 10, and as any of these may be substituted for y, the problem will still be capable of an infinite number of solutions, if fractions may be admitted; but if it be required that x and y be both whole numbers, then there cannot be above nine such numbers that can be put for y; nor perhaps all these neither, as remains in the next place to be shewn. Now to find what whole number being put for y will bring out x a whole number also, I reduce the quantity $\frac{10y}{10-y}$ to a more simple one, by dividing $10y$ by $10-y$, or rather by $-y+10$, beginning with $-y$ thus: $10y$ divided by $-y$ quotes -10, which I put down in the quotient; then multiplying the divisor $-y+10$ by -10 the quotient, I find the product to be $+10y-100$, which being subtracted from $10y$ the dividend, leaves 100 for a remainder; but not intending to carry on the division any farther, I represent the rest of the quotient by the fraction $\frac{100}{10-y}$; so $x=\frac{100}{10-y}-10$; therefore, that x may be a whole number, it is necessary that $\frac{100}{10-y}$ be a whole number; but this will be impossible, unless $10-y$ be some one of the divisors of 100, I mean such a number as will divide 100 without remainder: I enquire therefore in the next place, how many such divisors 100 will admit of that are under 10; for so long as y is any thing, $10-y$ must be less than 10; and I find four such divisors,

to

to wit, 1, 2, 4 and 5; therefore if $10-y$ be put equal to any of theſe, x or $\frac{100}{10-y} - 10$ muſt come out a whole number; and it muſt alſo come out affirmative; for ſo long as $10-y$ is greater than nothing and leſs than 10, $\frac{100}{10-y}$ will always be greater than $\frac{100}{10}$, that is, than 10, and conſequently $\frac{100}{10-y} - 10$ or x will be affirmative. Let us then ſuppoſe firſt, $10-y=1$, and we ſhall have $y=9$, and $\frac{10y}{10-y}$ or $x=90$. 2dly, if $10-y=2$, we ſhall have $y=8$, and $x=40$. 3dly, if $10-y=4$, we ſhall have $y=6$, and $x=15$. Laſtly, if $10-y=5$, we ſhall have $y=5$, and $x=10$: therefore this queſtion admits of 4 ſolutions in whole numbers, to wit, 90 and 9, 40 and 8, 15 and 6, and 10 and 5; all which equally anſwer the condition of the problem, as will appear upon trial.

THE ELEMENTS OF ALGEBRA.

BOOK VII.

Of PROPORTION.

Of the neceſſity of reſuming the doctrine of proportion, and removing ſome difficulties which ſeem to attend it as delivered in the Elements.

Art. 264. IN the 15th and 16th articles of this treatiſe I have laid down as clearly, and yet as ſuccinctly, as I was able, the doctrine of proportion ſo far as it relates to numbers and commenſurable quantities, whereof any one may be conſidered as ſome multiple part or parts of another of the ſame kind; and it ſerved well enough all the purpoſes it was deſigned for. But being in the next book to apply Algebra to Geometry, and ſo to conſider proportion as it relates to magnitudes in general whether commenſurable or incommenſurable, I ſhould come ſhort of the ἀκρίβεια *geometrica*, was I not to reſume this ſubject, and to conſider it now in its full extent as it is laid down in the fifth book of the elements of Geometry.

metry. I might indeed have excuſed myſelf from this part of my taſk, and ſhould have been very glad to have done it, by referring the reader at once to the elements themſelves without any further aſſiſtance; but I could not withſtand ſome reaſons drawn from experience, which to me ſeemed to plead very powerfully to the contrary.

I frequently obſerve, that moſt of thoſe who ſet themſelves to read *Euclid*, when they come at the fifth book, which treats of proportion, either entirely paſs it by as containing ſomething too ſubtil to be comprehended by young beginners, or elſe touch ſo very ſlightly upon it as to be little the better for it; and thus the doctrine of proportion (which is certainly the moſt extenſive, and conſequently the moſt uſeful, part of the Mathematics) is either taken for granted, or at beſt but partially underſtood by them. The ſchemes there made uſe of are ſcarce bold enough, I had almoſt ſaid, ſcarce complicated enough, to affect the imagination ſo ſtrongly as is neceſſary to fix the attention.

The firſt, ſecond, third, fifth and ſixth propoſitions are ſelf-evident, as well as ſome others, and upon that very account create an impatient reader much greater uneaſineſs than if they were farther removed from common ſenſe; becauſe the truths from whence theſe propoſitions are deduced are not ſo diſtinct from the propoſitions themſelves as in many other caſes. But it ought to be conſidered, that the perfection of all arts and ſciences in general, and of Geometry in particular, is, to ſubſiſt upon as few firſt principles or axioms as is poſſible; and therefore, whenever a propoſition, how evident ſoever it may appear in itſelf, can be deduced from any that is gone before, it ought by all means to be ſo deduced, and not to be made a firſt principle, and ſo unneceſſarily to increaſe their number.

The deſign of a geometrical demonſtration is not ſo much to illuſtrate the propoſition to which it is

annexed, or to render it more evident than it would have been without it (though this ought certainly to be done where-ever the nature of things will permit) as it is to ſhew the neceſſary connection the propoſition to be demonſtrated has with ſome previous truth already admitted or proved, ſo as to ſtand and fall together, whether ſuch previous truths be more or leſs evident than the propoſition to be demonſtrated: I ſay more or leſs evident; for it is not uncommon in the courſe of *Euclid's* geometry to meet with propoſitions demonſtrated from others that are leſs evident than themſelves. For an inſtance of this we need go no farther than the twentieth propoſition of the firſt book, where it is demonſtrated that *in every triangle any two ſides taken together are greater than the third:* now it is certain that this propoſition is more evident than that the external angle is greater than either of the internal and oppoſite ones; and yet the former, by the help of the 19th propoſition, is demonſtrated from the latter.

But there is another reaſon to be given for demonſtrating ſelf-evident propoſitions in many caſes, and particularly in this fifth book of the elements. A propoſition may ſometimes be taken to be ſelf-evident according to our narrow and ſcanty notions of things, which, when better underſtood, will be found to be otherwiſe. Theſe propoſitions, to wit, that *equal quantities will have the ſame proportion to a third*, that *of two unequal quantities the greater will have a greater proportion to a third than the leſs*, and ſome others of the ſame ſtamp in the fifth book, are ſuch as will paſs with moſt for ſelf-evident propoſitions; and ſo they are without all doubt according to the common conception of proportionality; but when they come to be examined according to the juſter and more extenſive idea *Euclid* has given of it, I fear they will both, and the latter more eſpecially, be found to want demonſtration.

In

In a perfect and regular ſyſtem of elementary Geometry, ſuch a one as that of *Euclid* may be ſuppoſed to be, or at leaſt to have been, certain properties of lines, angles, and figures, are to be laid down, and thoſe of the ſimpleſt kind, for definitions; from whence, and from one another, all the reſt are to be derived with the utmoſt rigour, without the leaſt appeal even to common ſenſe. Common ſenſe is by no means to be made the ſtandard of any geometrical truths whatever, except firſt principles: its province muſt be only to judge whether a propoſition be duly demonſtrated according to the rules already preſcribed, that is, whether the neceſſary connection it has with any previous truth be clearly and diſtinctly made out; when that is done, nothing remains but to paſs ſentence. Whilſt the ſcience continues thus circumſcribed, no miſtakes, no diſputes, can ariſe concerning its boundaries; but whenever theſe come to be tranſgreſſed, ſuch a looſe will be given to Geometry that it would be impoſſible to agree upon any others whereby to reſtrain it.

Thus much I thought proper to lay down concerning the nature of a geometrical demonſtration, that young ſtudents may not ſometimes think themſelves diſappointed, or not proceed with that coolneſs and judgment abſolutely neceſſary to conduct them through the elements of Geometry.

But as to the matter in hand, there is another difficulty ſtill behind, which I believe is often a greater diſcouragement to young beginners in their entrance into the doctrine of proportion, than any which have hitherto been alledged, and that is the difficulty of underſtanding and applying *Euclid's* definition of proportionable quantities. But, to take away all excuſe from this quarter, I have here annexed a ſmall diſſertation, conducing (as I take it) to clear up that definition. It is an extract out of ſome looſe papers I have by me; and therefore the reader muſt not be ſurprized if he finds ſome things repeated here which have

have already been mentioned in another part of this book.

A vindication of the fifth definition of the fifth book of EUCLID'S *elements.*

262. *N. B.* For a more diſtinct underſtanding of what follows, it muſt be obſerved, that *By a part, in the ſenſe of the fifth book of* Euclid, *is meant an aliquot part, and not a part as part related to ſome whole.* Thus 3 is a part of 12 in *Euclid's* ſenſe, as being juſt four times contained in it; and though 9 be a part of 12 in the ſame ſenſe as the part is diſtinguiſhed from the whole, yet 9 in *Euclid's* ſenſe is not a part, but parts of 12, as being three fourth parts of it.

1ſt. *If two quantities* A *and* B *be commenſurable, then* A *muſt neceſſarily be either ſome multiple, or ſome part, or ſome parts, of* B. For if *A* and *B* be commenſurable, then either *B* muſt meaſure *A*, or *A* muſt meaſure *B*, or they muſt both be meaſured by ſome third quantity: if *B* meaſures *A* any number of times, ſuppoſe 3 times, then *A* will be equal to 3 times *B*, and conſequently will be a multiple of *B*: if *A* meaſures *B* any number of times, ſuppoſe 3 times, then *A* will be a third part of *B*, and conſequently will be a part of *B*: if *A* and *B* do not meaſure one the other, let *C* meaſure them both, and let *C* be contained exactly in *A* 3 times and in *B* 4 times: then will a third part of *A* be equal to a fourth part of *B*, as being both equal to *C*; multiply both ſides of the equation by 3, and you will have $\frac{3}{3}$ of *A*, or *A* equal to $\frac{3}{4}$ of *B*; therefore in this caſe *A* is ſaid to be parts of *B*.

2dly. *If two quantities* A *and* B *are incommenſurable, then* A *can neither be any multiple of* B, *nor any part or parts of it.* For if *A* was any multiple of *B*, then *B* would meaſure both itſelf and *A*, which contradicts the ſuppoſition of their incommenſurability: in like manner, if *A* was any part of *B*, then *A* would meaſure both itſelf and *B*: in the laſt place I ſay that neither

ther can *A* be any parts of *B*; for if *A* was any parts of *B*, ſuppoſe, $\frac{1}{4}$ of *B*, then $\frac{1}{4}$ of *B* would meaſure both *A* and *B*, which ſtill contradicts the ſuppoſition: *A* indeed may be greater or leſs than ſome part or parts of *B*, but can never be equal to any; ſo ſubtil is the compoſition of continued quantity. As for inſtance; it is demonſtrated in art. 201, that the ſide and diagonal line of a ſquare are incommenſurable to each other: let then *A* be the diagonal of a ſquare whoſe ſide is *B*, and the ſquare of *A* will be to the ſquare of *B* as 2 to 1, as is evident from the 47th of the firſt book of *Euclid*; therefore *A* will be to *B* as the ſquare root of 2 is to 1; but the ſquare root of 2 is 1.414 *&c.* that is, $\frac{14}{10}$, or more nearly $\frac{141}{100}$, or more nearly ſtill $\frac{1414}{1000}$: whence it follows, that if the ſide of a ſquare be divided into 10 equal parts, the diagonal will contain more than 14 of theſe parts, but not ſo much as 15 of them; if the ſide be divided into 100 equal parts, the diagonal will contain above 141 of ſuch parts, but not 142; if the ſide be divided into 1000 equal parts, the diagonal will contain above 1414 of ſuch parts, but not 1415; and ſo on *ad infinitum*: therefore the diagonal of a ſquare can never be exactly expreſſed by parts of the ſide, any more than the ſide can by parts of the diagonal. The ſide may indeed be ſet off upon the diagonal, and ſo be conſidered as part of it, ſo far as part of the whole; but the ſide can never be exactly expreſſed by any number of aliquot parts of the diagonal, be theſe parts ever ſo ſmall. Limits may be found and expreſſed by parts of the diagonal as near as poſſible to each other, between which the ſide ſhall always conſiſt, and by which it may be expreſſed to any degree of exactneſs except perfect exactneſs*. And thus alſo may approximations be made in the expreſſions of

* See the Quarto Edition, p. 306.

many

many other incommenſurable quantities one by another.

3dly, From the laſt ſection it appears, that *If two quantities* A *and* B *be incommenſurable, no multiple of one can ever be equal to any multiple of the other.* For if, for inſtance, $4A$ could be equal to $3B$, then (dividing by 4) A will be found to be juſt $\frac{3}{4}$ of B, contrary to what has been above demonſtrated.

4thly, *If four quantities* A, B, C *and* D *be ſuch, that* A *is the ſame part or parts of* B *that* C *is of* D, *then are thoſe four quantities* A, B, C *and* D *ſaid to be proportionable, or* A *is ſaid to have the ſame proportion to* B *that* C *hath to* D. Thus if A be a fourth part of B, and C a fourth part of D, then A will be the ſame part of B that C is of D, and they will be proportionable. Thus again, if $A=\frac{3}{4}B$, and $C=\frac{3}{4}D$, or if $A=\frac{8}{4}B$ or $2B$, and $C=\frac{8}{4}D$ or $2D$, or if $A=\frac{11}{4}B$, and $C=\frac{11}{4}D$, in all theſe inſtances (comprehending multiples under the notion of parts) A may be ſaid to be the ſame parts of B that C is of D; and therefore, according to this definition, A hath the ſame proportion to B that C hath to D, which is true, and the mark of proportionality here given is infallible, but not adequate to our idea of it; for though this mark be never found without proportionality, yet proportionality is often found without this mark. Proportionality is often found among incommenſurables; but it can never be tried or proved by the marks here given. I believe nobody ever doubted that the ſide of one ſquare hath the ſame proportion to its diagonal that the ſide of any other ſquare hath to its diagonal; and therefore A may have the ſame proportion to B that C hath to D, though A be incommenſurable to B, and C to D: yet who can ſay in this caſe, that A is the ſame part or parts of B that C

is of *D*, when it has already been ſhewn, that *A* is no part or parts of *B*, nor *C* of *D*? This way therefore of defining proportionable quantities by a ſimilitude of aliquot parts, cannot (in ſtrictneſs of Geometry) be laid down as a proper foundation, ſo as from thence to derive all the other properties of proportionality: for ſince theſe properties are to be applied to incommenſurable as well as commenſurable quantities, it is fit they ſhould be deduced from a fundamental property that relates equally to both.

5thly, In order then to eſtabliſh a more general character of proportionality, I ſhall aſſume the following principle, which equally relates to commenſurable and incommenſurable quantities; and which, I believe, there is no one who has a juſt idea of proportionality, which way ſoever he may chooſe to expreſs it, or whether he can expreſs it or not, but will eaſily allow me, which is, that *If four quantities* A, B, C *and* D *be proportionable, that is, if* A *has the ſame proportion to* B *that* C *hath to* D, *it will then be impoſſible for* A *to be greater than any part or parts of* B, *but* C *muſt alſo be greater than a like part or parts of* D; *or for* A *to be equal to any part or parts of* B, *but that* C *muſt alſo be equal to a like part or parts of* D; *or for* A *to be leſs than any part or parts of* B, *but that* C *muſt alſo be leſs than a like part or parts of* D. Thus if *A* hath the ſame proportion to *B* that *C* hath to *D*, it will then be impoſſible for *A* to be greater than, equal to, or leſs than $\frac{14}{10}$ of *B*, but *C* muſt alſo be greater than, equal to, or leſs than $\frac{14}{10}$ of *D*. This principle, I ſay, is ſo very clear that nothing more needs to be ſaid of it, either by way of explication or demonſtration: and if by the help hereof I can demonſtrate the converſe, we ſhall then have a general mark of proportionality as extenſive as proportionality itſelf. Now the converſe of the foregoing proportion is this; *If there be*

be four quantities A, B, C *and* D, *and if the nature of theſe quantities be ſuch, that* A *cannot poſſibly be greater than, equal to, or leſs than, any part or parts of* B, *but at the ſame time* C *muſt neceſſarily be greater than, equal to, or leſs than, a like part or parts of* D, *let the number or denomination of theſe parts be what they will; I ſay then, that* A *muſt neceſſarily have the ſame proportion to* B *that* C *hath to* D. If this be denied, let ſome other quantity E have the ſame proportion to D that A hath to B, that is, let A, B, E and D be proportionable quantities; then imagining the quantity D to be divided into any number of equal parts, ſuppoſe 10, let E be greater than 14 of theſe parts and leſs than 15, that is, let E be greater than $\frac{14}{10}$ and leſs than $\frac{15}{10}$ of D; then muſt A neceſſarily be greater than $\frac{14}{10}$ and leſs than $\frac{15}{10}$ of B: this is evident from the conceſſion already made, ſince A is ſuppoſed to have the ſame proportion to B that E hath to D. But if A be greater than $\frac{14}{10}$ and leſs than $\frac{15}{10}$ of B, then C muſt be greater than $\frac{14}{10}$ and leſs than $\frac{15}{10}$ of D by the *hypotheſis*; the relation between A, B, C and D being ſuppoſed to be ſuch, that A cannot be greater or leſs than any part or parts of B, but C accordingly muſt be greater or leſs than a like part or parts of D. Therefore we are now advanced thus far, that if E lies between $\frac{14}{10}$ and $\frac{15}{10}$ of D, C muſt alſo neceſſarily lie betwixt the ſame limits; now the difference betwixt $\frac{14}{10}$ and $\frac{15}{10}$ of D is $\frac{1}{10}$ of D; therefore the difference betwixt C and E, which lie both between theſe two

limits, muſt be leſs than $\frac{1}{10}$ of D. This is upon a ſuppoſition that the quantity D was at firſt divided into 10 equal parts; but if inſtead of 10 we had ſuppoſed it to have been divided into 100, or 1000, or 10000 equal parts (which ſuppoſitions could not have affected the quantities C and E,) the concluſion would then have been, that the difference betwixt C and E would have been leſs than the hundredth, or thouſandth, or ten thouſandth part of D; and ſo on *ad infinitum:* therefore the difference between C and E (if there be any difference) muſt be leſs than any part of D whatever; therefore the difference between C and E is only imaginary, and not real; therefore in reality C is equal to E. Since then C is equal to E, and that A is to B as E is to D, the conſequence muſt be that A is to B as C is to D. *Q. E. D.*

Here then we have a proper characteriſtic of proportionality which always accompanies it, and, on the other hand, is never to be found without it, to wit, that four quantities may be ſaid to be proportionable, the firſt to the ſecond as the third is to the fourth, when the firſt cannot be greater than, equal to, or leſs than, any part or parts of the ſecond, but the third muſt accordingly be greater than, equal to, or leſs than, a like part or parts of the fourth: or thus; *Four quantities may be ſaid to be proportionable as above, when the firſt cannot be contained between two limits expreſſed by any parts of the ſecond, how near ſoever theſe limits may approach to each other, but the third muſt neceſſarily be contained between the limits expreſſed by like parts of the fourth.*

6thly, Had *Euclid* ſtopped here, without refining any further upon the criterion of proportionality delivered in the laſt ſection (for I dare venture to affirm, he was no ſtranger to it,) I doubt not but it would have given much greater ſatisfaction to the generality of his diſciples, eſpecially thoſe of a leſs delicate taſte,

than

than that which he advances in the fifth book of his elements, as being more closely connected with the common idea of proportionality: but it was easy to see, that in demonstrating several other affections of proportionable quantities upon this scheme, there would then be frequent occasion for taking such and such parts of magnitudes, as there is now for taking such and such multiples of them, the *praxis* of which partition had no where as yet been taught by *Euclid*; nay, he rather seems to have determined, as far as possible, to avoid it, and that upon no ill grounds neither; for the use of whole numbers is in all cases justly esteemed more natural and more elegant than that of fractions, and the multiplication of quantities has always been looked upon as more simple in the conception than the resolution of them into their aliquot parts. It is for this reason that *Euclid* never shews how to multiply a line or any other quantity whatever, assuming the *praxis* thereof as a sort of *postulatum*; whereas in the ninth proposition of the sixth book of his elements he shews how to cut off any aliquot part of any given line whatever. Upon these and such like considerations it was that *Euclid* resolved to advance his characteristic property of proportionality one step higher, by substituting multiples instead of aliquot parts in such a manner as we shall now describe; and we shall at the same time demonstrate the justness of his definition from what has been already laid down in the last section. The proposition to be demonstrated shall be this: *If there be four quantities* A, B, C *and* D, *whereof* EA *and* EC *are any equimultiples of the first and third, and* FB *and* FD *are any other equimultiples of the second and fourth; and if now these quantities are of such a nature, that* EA *cannot be greater than, equal to, or less than,* FB, *but at the same time* EC *must necessarily be greater than, equal to, or less than,* FD, *when compared respectively, be the multiplicators* E *and* F *what they will: I say then that* A *must necessarily have the same proportion to* B *that* C

hath to D. Now that four quantities may be under ſuch circumſtances as are here deſcribed, can be queſtioned by no one who has with any attention conſidered the nature of proportionable quantities: for ſuppoſe *A* to be the diameter and *B* the circumference of any circle, and *C* to be the diameter and *D* the circumference of any other circle; who doubts but that twenty-two times the diameter of one circle will be greater than, equal to, or leſs than, ſeven times the circumference, according as twenty-two times the diameter of the other circle is greater than, equal to, or leſs than, ſeven times the circumference of that circle? I now proceed to the demonſtration of the propoſition.

If it be denied that *A* is to *B* as *C* is to *D*, let *A* be to *B* as *G* is to *D*; and then, ſuppoſing *D* to be divided into 10 equal parts, let G be greater than 14 of theſe parts, and leſs than 15: then ſince by the ſuppoſition *A* is to *B* as *G* is to *D*, we ſhall have *A* greater than $\frac{14}{10}$ and leſs than $\frac{15}{10}$ of *B*; therefore $10A$ will be greater than $14B$ and leſs than $15B$; but by the *hypotheſis*, no multiple of *A* can be greater or leſs than any multiple of *B*, but the ſame multiple of *C* muſt be greater or leſs than the ſame multiple of *D*; therefore $10C$ is greater than $14\ D$ and leſs than $15D$; therefore *C* is greater than $\frac{14}{10}$ and leſs than $\frac{15}{10}$ of *D*; therefore if *G* be a quantity between $\frac{14}{10}$ and $\frac{15}{10}$ of *D*; *C* muſt alſo be a quantity between the ſame limits; therefore the difference betwixt *C* and *G* muſt be leſs than $\frac{1}{10}$ of *D*. This is upon a ſuppoſition that *D* was divided into 10 equal parts; but *C* and *G* will be the ſame, into what number of parts ſoever we ſuppoſe *D* to be divided; therefore if we ſuppoſe *D* to be divided into

100,

100, 1000, or 10000 equal parts, *&c.* the difference betwixt *C* and *G* might have been ſhewn to be leſs than the hundredth, or the thouſandth, or the ten thouſandth part of *D*; and ſo on *ad infinitum*; therefore *C* and *G* are equal, as was ſhewn in the 5th ſection. Since then *A* cannot be greater than, equal to, or leſs than, any part or parts of *B*, but *G* muſt be greater than, equal to, or leſs than, a like part or parts of *D*, becauſe *A* is to *B* as *G* is to *D*; and ſince *G* cannot be greater than, equal to, or leſs than, any part or parts of *D*, but *C* muſt be greater than, equal to, or leſs than, the ſame part or parts of *D*, becauſe *G* and *C* are equal; it follows *ex æquo*, that *A* cannot be greater than, equal to, or leſs than, any part or parts of *B*, but that *C* muſt accordingly be greater than, equal to, or leſs than, a like part or parts of *D*; and conſequently that *A* is to *B* as *C* is to *D*, according to the mark of proportionality given in the laſt ſection. *Q. E. D.*

Four quantities then may be ſaid to be proportionable, the firſt to the ſecond as the third to the fourth, when no equimultiples whatever can be taken of the firſt and third, but what muſt either be both greater than, or both equal to, or both leſs than, any other equimultiples that can poſſibly be taken of the ſecond and fourth, when compared reſpectively.

7thly, As number is a diſcrete, and not a continued quantity, there is ſuch a thing as a *minimum* in the parts of number, whereas in thoſe of extenſion there is none; whence it follows, that the parts of number muſt neceſſarily be more diſtinct, and for that reaſon more aſſignable, than are the parts of extenſion. Again, as all numbers are commenſurable by unity, every number may be conceived either as ſome multiple, or ſome part, or ſome parts, of every other. Hence it is that *Euclid*, defining proportionable numbers, makes uſe of the definition given in the 4th ſection; ſo unwilling was he to recede from

the common notion of proportionable quantities, whenever the ſubject he treated of would bear it.

Of the ſeventh definition of the fifth book of Euclid.

263. If it be allowed to be a ſufficient mark of the proportionality of four quantities, when they are ſo related to one another in their own natures, that no equimultiples can be taken of the firſt and third, but what muſt either be both greater than, or both equal to, or both leſs than, any other equimultiples that can poſſibly be taken of the ſecond and fourth; then wherever it happens, or may happen otherwiſe, there can be no proportionality. As for inſtance, *If in comparing equimultiples of the firſt and third with other equimultiples of the ſecond and fourth, there be any caſes wherein the firſt multiple ſhall be greater than the ſecond, and yet the third not greater than the fourth; or wherein the firſt multiple ſhall be leſs than the ſecond, and the third not leſs than the fourth; then the firſt quantity will not have the ſame proportion to the ſecond that the third hath to the fourth, but either a greater as in the former caſe, or a leſs as in the latter.* Nay, and I may add further, that *if of four quantities, the firſt hath a greater proportion to the ſecond than the third hath to the fourth, there muſt be caſes exiſting, whether thoſe caſes can be aſſigned or not, wherein of equimultiples of the firſt and third, and of other equimultiples of the ſecond and fourth, the firſt multiple ſhall exceed the ſecond, and yet the third ſhall not exceed the fourth:* for if no ſuch caſes were poſſible, then the firſt quantity muſt either have the ſame proportion to the ſecond that the third hath to the fourth, or a leſs: both which are contrary to the ſuppoſition. Thus we have found the fifth and ſeventh definitions of the fifth book of the elements both of a piece.

A queſtion

A queſtion ariſing out of the foregoing article.

264. This is all that was neceſſary to be obſerved concerning the foregoing definitions; but if, having given four quantities A, B, C and D, whereof A hath a greater proportion to B than C hath to D, any one, for his own private ſatisfaction, would know how to find ſuch equimultiples of A and C, and ſuch other equimultiples of B and D, that A's multiple ſhall exceed that of B, and at the ſame time C's multiple ſhall not exceed that of D, it muſt be done thus: If the quantities A, B, C and D be commenſurable, let their ratios be expreſſed by numbers: as for inſtance, let A be to B as 7 to 5, and let C be to D as 4 to 3; then will 4 and 3, the numeral expreſſions of the leſſer ratio, be the multiplicators required, if of the terms A and B, the greater term A be multiplied into the leſſer multiplicator 3, and the leſſer term B into the greater multiplicator 4; for then $3A$ (21) will be greater than $4B$ (20), and yet $3C$ (12) will not be greater than $4D$ (12), for the two laſt multiples are equal. But if ſuch multiples be required, that the firſt multiple ſhall be greater than the ſecond, and at the ſame time the third multiple ſhall be leſs than the fourth, then ſome intermediate fraction muſt be taken between $\frac{7}{5}$ and $\frac{4}{3}$, and the terms of ſuch a fraction will be the multiplicators required. As for inſtance, throwing the extreme fractions into decimals, we have $\frac{7}{5}=1.4$, and $\frac{4}{3}=1.34\overline{6}$; therefore if any decimal fraction be taken between 1.4 and 1.34, ſuch a fraction being reduced to integral terms will give the multiplicators required. Let us aſſume 1.375, that is $\frac{1375}{1000}$ or $\frac{11}{8}$; then will $8A$ (56) be greater than $11B$ (55), and at the ſame time $8C$ (32) will be leſs than $11D$ (33).

If the quantity A be incommenſurable to B, or C to D, or both to both, find however, by ſcholium the

the ſecond in art. 179*, ſuch numbers as will expreſs theſe ratios as accurately as occaſion requires. As let the ratio of the number E to the number F be nearly the ſame with that of A to B, and let the ratio of the number G to the number H be nearly the ſame with that of C to D; then if either of theſe ratios, to wit, the ratio of E to F, or the ratio of G to H, lie between the ratios of A to B and of C to D, the terms of the intermediate ratio will make proper multiplicators; but if neither of theſe caſes happen, ſome intermediate fraction muſt be taken between the two fractions $\frac{E}{F}$ and $\frac{G}{H}$.

Having thus prepared my young ſtudent for *Euclid's* doctrine of proportion, partly by ſetting him right in his notions of things, and partly by removing out of his way all that rubbiſh which ſeemed to block up his entrance to it; I hope I ſhall now be able to conduct him through the whole with a great deal of eaſe, and that he will meet with fewer difficulties in reading the following propoſitions than an equal number in any other part of the elements: and yet all I have done herein has been only to mitigate, as far as I thought proper, the rigour and ſeverity of the author's manner of writing, and to render his demonſtrations more eaſy to the imagination, which the compiler in his whole ſyſtem ſeems to have had no great tenderneſs for: but, whatever I have done elſe, I have taken care to preſerve the force of the demonſtrations, and I hope, in a great meaſure, their elegancy too. I have uſed no algebraic computations in demonſtrating theſe propoſitions, except what may be juſtified by the antecedent ones; as well knowing that theſe principles were never intended to depend upon arithmetical operations, but rather arithmetical operations upon them. I have however, for the reader's eaſe, made uſe of the ſimpleſt algebraic notation. Thus A, B, C, D ſignify magnitudes of any kind whatever; E, F, G, H

* See the Quarto Edition, p. 285.

always

always ſignify whole numbers, unleſs where notice is given to the contrary; $A+B$ ſignifies the ſum of any two homogeneous magnitudes A and B; $A-B$ their difference, or the exceſs of A above B; EA and FB ſignify any two multiples of A and B, the multiplicators being E and F; *&c.* I have ſometimes alſo uſed very eaſy conſequences of this notation; as that if $A-B$ be added to B, the ſum will be A, which indeed is a general axiom, and ſaying no more than that if to any magnitude be added the exceſs of a greater above it, the ſum will be the greater magnitude.

The Fifth Book of *EUCLID's* ELEMENTS.

DEFINITIONS.

265. 1. *A leſſer magnitude is ſaid to be a part of a greater, when the leſſer meaſures the greater.*

2. *A greater magnitude is ſaid to be a multiple of a leſs, when the greater is meaſured by the leſs.*

Note. Our language is not nice enough to expreſs theſe two definitions as they are in the Greek and Latin.

We may further obſerve, that by theſe two definitions every ſimple quantity is excluded from being conſidered either as a part or multiple of itſelf; for to be a part, in this ſenſe, is to be leſs than that whereof it is a part, and to be a multiple is to be greater than that whereof it is a multiple.

3. *Ratio is that mutual relation two homogeneous quantities are in, when compared together in reſpect to their quantity.* Thus the exceſs of 2 above 1 is equal to the exceſs of 4 above 3, and yet the ratio of 2 to 1 is greater than the ratio of 4 to 3; that is, 2 has more magnitude when compared with 1 than 4 hath when compared with 3; ſince 2 is double of 1, and 4 is not double of 3. But on the other hand, 3 hath a greater ratio to 4 than 1 hath to 2, becauſe 3 hath more magnitude in compariſon of 4 than 1 hath in compa-

compariſon of 2; for 3 is more than the half of 4, whereas 1 is but juſt the half of 2.

4. *All quantities are ſaid to be in ſome ratio or other, when they are capable of being ſo multiplied as to exceed one another.*

Note. By this definition, 1ſt, All heterogeneous quantities are excluded from having any ratio one to another, becauſe heterogeneous quantities are ſuch, that their multiples are no more capable of compariſon as to exceſs and defect, than the quantities themſelves: a yard can never be multiplied till it exceeds an hour, *&c.* 2dly, All infinitely ſmall quantities are hereby excluded from having any ratio to finite ones, becauſe the former can never be ſo multiplied as to exceed the latter.

5. *Magnitudes are ſaid to be in the ſame ratio, the firſt to the ſecond as the third to the fourth, when no equimultiples can be taken of the firſt and third, but what muſt either be both greater than, or both equal to, or both leſs than, any other equimultiples that can poſſibly be taken of the ſecond and fourth.*

Note. This and the ſeventh definition have been explained already.

6. *Magnitudes in the ſame ratio may be called proportionals.*

7. *If there be four quantities, whereof equimultiples are taken of the firſt and third, and other equimultiples of the ſecond and fourth; and if any caſe can be aſſigned, wherein the multiple of the firſt ſhall be greater than the multiple of the ſecond, and at the ſame time the multiple of the third ſhall not be greater than the multiple of the fourth; then of theſe four quantities, the firſt is ſaid to have a greater ratio to the ſecond than the third hath to the fourth.*

8. *Proportion conſiſts in a ſimilitude of ratios.*

9. *Proportion cannot be expreſſed in fewer than three terms:* as when we ſay that *A* is to *B* as *B* is to *C*.

10. *Whenever three quantities are continual proportionals, the firſt is ſaid to be to the third in a duplicate ratio*

AC : CB : BF : DG

ratio of the first to the second: and on the other hand, the first is said to be to the second in a subduplicate ratio of the first to the third.

11. *If four quantities be continual proportionals, the first is said to be to the fourth in a triplicate ratio of the first to the second; and so on.*

12. *The antecedents of all proportions are called homologous terms; and so also are the consequents: but antecedents and consequents considered together, are never called homologous terms, but heterologous.*

Note. These three last definitions, though placed here, have nothing to do in the following fifth book, but in the sixth.

13. *Alternate proportion is, when four quantities being proportionable, the first to the second as the third to the fourth, it is concluded, that the first is to the third as the second to the fourth*; the justness of which conclusion, as well as of all the rest that follow, will be sufficiently made out in the following propositions:

14. *Inverse proportion is, when four quantities being proportionable, the first to the second as the third to the fourth, it is concluded, that the second is to the first as the fourth to the third.*

15. *Composition of proportion is, when four quantities being proportionable, the first to the second as the third to the fourth, it is concluded, that the sum of the first and second is to the second as the sum of the third and fourth is to the fourth.*

16. *Division of proportion is, when four quantities being proportionable, the first to the second as the third to the fourth, it is concluded, that the excess of the first above the second is to the second as the excess of the third above the fourth is to the fourth.*

17. *Conversion of proportion is, when four quantities being proportionable, the first to the second as the third to the fourth, it is concluded, that the first is to the excess of the first above the second as the third is to the excess of the third above the fourth.*

18. *If ever ſo many quantities in one ſeries be compared with as many in another; and if from all the ratios in one being equal to all thoſe in the other, either in the ſame or a different order, it be concluded, that the extremes in one ſeries are in the ſame proportion with the extremes in the other, this proportionality of the extremes is ſaid to follow* ex æquo, *or* ex æqualitate rationum.

19. *If all the ratios in one ſeries be equal to all thoſe in the other, and in the ſame order, this is called ordinate proportion; and the extremes in this caſe are ſaid to be proportionable* ex æquo ordinate, *or barely* ex æquo.

20. *If all the ratios in one ſeries be equal to all thoſe in the other, but not in the ſame order, this is called inordinate proportion; and the extremes are ſaid to be proportionable* ex æquo perturbate.

Thus if *A*, *B* and *C* in one ſeries be compared with *D*, *E* and *F* in another; and if *A* is to *B* as *D* to *E*, and *B* to *C* as *E* to *F*, this is called ordinate proportion, and *A* is ſaid to be to *C* as *D* to *F ex æquo ordinate*, or barely *ex æquo:* but if *A* is to *B* as *E* to *F*, and *B* to *C* as *D* to *E*, this is called inordinate proportion, and *A* is ſaid to be to *C* as *D* to *F ex æquo perturbate.*

PROPORTION I.

266. *If there be ever ſo many homogeneous quantities,* A, B, C, *whereof* EA, EB, EC *are equimultiples reſpectively; I ſay then, that the ſum* $\overline{EA+EB+EC}$ *will be the ſame multiple of the ſum* $\overline{A+B+C}$ *that* EA *is of* A, *or* EB *of* B, &c.

For the multiples *EA*, *EB* and *EC* may be conſidered as ſo many diſtinct heaps or parcels, whereof *EA* conſiſts wholly of *A's*, *EB* of *B's*, and *EC* of *C's*; and ſince the number of *A's* in *EA* is the ſame with the number of *B's* in *EB*, or of *C's* in *EC*, it follows, that as often as *A* can be ſingly taken out of *EA*, or

B out of *EB*, or *C* out of *EC*, juſt ſo often may the whole ſum $\overline{A+B+C}$ be taken out of the whole ſum $\overline{EA+EB+EC}$; therefore the ſum $\overline{EA+EB+EC}$ is the ſame multiple of the ſum $\overline{A+B+C}$ that *EA* is of *A*, or *EB* of *B*, &c. *Q. E. D.*

PROPOSITION 2.

267. *If* EA *and* EB *be equimultiples of any two quantities whatever* A *and* B, *and if* FA *and* FB *be alſo equimultiples of the ſame; I ſay then that the ſum* $\overline{EA+FA}$ *will be the ſame multiple of* A *that the ſum* $\overline{EB+FB}$ *is of* B.

For ſince the number of *A's* in *EA* is the ſame with the number of *B's* in *EB*; and ſince alſo the number of *A's* in *FA* is the ſame with the number of *B's* in *FB*, add equals to equals, and the number of *A's* in $\overline{EA+FA}$ will be the ſame with the number of *B's* in $\overline{EB+FB}$, that is, the ſum $\overline{EA+FA}$ will be the ſame multiple of *A* that the ſum $\overline{EB+FB}$ is of *B*. *Q. E. D.*

PROPOSITION 3.

268. *If* EA *and* EB *be equimultiples of any two quantities whatever* A *and* B, *and if* 3EA *and* 3EB *be any equimultiples of* EA *and* EB; *I ſay then, that* 3EA *and* 3EB *will alſo be equimultiples of* A *and* B.

This is evident from the laſt proportion: for ſince *EA* and *EB* are equimultiples of *A* and *B*; and ſince *EA* and *EB* are again equimultiples of the ſame, it follows from that propoſition, that the ſum $2EA$ is the ſame multiple of *A* that the ſum $2EB$ is of *B*: again, ſince $2EA$ and $2EB$ are equimultiples of *A* and *B*, and ſince *EA* and *EB* are other equimultiples of the ſame, the ſum $3EA$ is the ſame multiple of *A* that the ſum $3EB$ is of *B*; and ſo on *ad infinitum*. *Q. E. D.*

PRO-

PROPOSITION 4.

169. *If four quantities* A, B, C *and* D *be proportionable,* A *to* B *as* C *to* D, *and if* EA *and* EC *be any equimultiples of the firſt and third, and* FB *and* FD *any other equimultiples of the ſecond and fourth; I ſay then that theſe multiples will alſo be proportionable, provided they be taken in the ſame order as the proportionable quantities whereof they are multiples; that is, that* EA *will be to* FB *as* EC *is to* FD.

For let 3 *EA* and 3 *EC* be any equimultiples of *EA* and *EC*, and let 2*FB* and 2*FD* be any other equimultiples of *FB* and *FD:* then ſince 3*EA* and 3*EC* are equimultiples of *EA* and *EC*, and ſince *EA* and *EC* are equimultiples of *A* and *C*, it follows from the laſt propoſition that 3*EA* and 3*EC* are equimultiples of *A* and *C*; and for the ſame reaſon 2*FB* and 2*FD* are alſo equimultiples of *B* and *D*. Since then, *ex hypotheſi*, *A* is to *B* as *C* is to *D*; and ſince 3*EA* and 3*EC* are equimultiples of *A* and *C*, and 2*FB* and 2*FD* are alſo other equimultiples of *B* and *D*, it follows from the fifth definition, that 3*EA* cannot be greater than, equal to, or leſs than, 2*FB*, but 3*EC* muſt alſo be greater than, equal to, or leſs than, 2*FD*. Again, ſince we have four quantities *EA*, *FB*, *EC*, *FD*, whereof 3*EA* and 3*EC* repreſent any equimultiples of the firſt and third, and 2*FB* and 2*FD* any other equimultiples of the ſecond and fourth; and ſince 3*EA* cannot be greater than, equal to, or leſs than 2*FB*, but 3*EC* muſt in like manner be greater than, equal to, or leſs than 2*FD*, it follows from the fifth definition, than theſe four quantities *EA*, *FB*, *EC*, *FD* are proportionable; that *EA* is to *FB* as *EC* to *FD*. *Q. E. D.*

SCHOLIUM.

To this place is uſually referred the inverſion of proportion (though why to this, rather than to any other, I know not;) that is, that *if four quantities*

be

be proportionable, they will alſo be inverſely proportionable: as if A *be to* B *as* C *is to* D, *then* B *will be to* A *as* D *to* C. For let *EA* and *EC* be any equimultiples of *A* and *C*, and let *FB* and *FD* be any other equimultiples of *B* and *D*; and firſt let us ſuppoſe *FB* to be greater than *EA*; then will *EA* be leſs than *FB*: and becauſe *A* is to *B* as *C* is to *D*, *EC* will alſo be leſs than *FD* by the fifth definition; and therefore *FD* will be greater than *EC*: thus then we ſee that if *FB* be greater than *EA*, *FD* will alſo be greater than *EC*. And after the ſame manner it may be demonſtrated, that if *FB* be equal to, or leſs than *EA*, *FD* in like manner will be equal to, or leſs than *EC*. Since then we have four quantities *B*, *A*, *D*, *C*, whereof *FB* and *FD* are equimultiples of the firſt and third, and *EA* and *EC* are other equimultiples of the ſecond and fourth; and ſince *FB* cannot be greater than, equal to, or leſs than *EA*, but *FD* muſt accordingly be greater than, equal to, or leſs than *EC*, it follows from the fifth definition, that theſe four quantities *B*, *A*, *D*, *C*, muſt be proportionable; that *B* muſt be to *A* as *D* to *C*. *Q. E. D.*

PROPOSITION 5.

270. *If* A *and* B *be any two homogeneous quantities, whereof* A *is the greater, and whereof* EA *and* EB *are equimultiples reſpectively; I ſay then that the difference* $\overline{\text{EA} - \text{EB}}$ *will be the ſame multiple of the difference* $\overline{\text{A} - \text{B}}$ *that* EA *is of* A, *or* EB *of* B.

If this be denied, let *G* be the ſame multiple of $\overline{A-B}$ that *EA* is of *A*, or *EB* of *B*; then we ſhall have two quantities $\overline{A-B}$ and *B*, whoſe ſum is *A*, and whereof *G* and *EB* are equimultiples reſpectively; therefore, by the firſt propoſition, the ſum $\overline{G+EB}$ will be the ſame multiple of the ſum *A* that *EB* is of *B*: but *EA* is alſo the ſame multiple of *A* that *EB* is of *B*; therefore $\overline{G+EB}$ is the ſame mul-

tiple of A that EA is of A; therefore $\overline{G+EB}$ must be equal to EA; take EB from both sides, and G will be equal to $\overline{EA-EB}$: but G was the same multiple of $\overline{A-B}$ that EA was of A, or EB of B; therefore $\overline{EA-EB}$ will be the same multiple of $\overline{A-B}$ that EA is of A, or EB of B. *Q. E. D.*

PROPOSITION 6.

271. *If from* EA *and* EB, *equimultiples of any two quantities* A *and* B, *be subtracted* FA *and* FB *any other equimultiples of the same; the remainders* $\overline{EA-FA}$ *and* $\overline{EB-FB}$ *will either be equal to the quantities* A *and* B *respectively, or they will be equimultiples of them.*

CASE I.

In the first place, let the remainder $\overline{EA-FA}$ be equal to A; I say then that the other remainder $\overline{EB-FB}$ will also be equal to B. For since FA is the same multiple of A that FB is of B, it follows from the nature of multiples, that $\overline{FA+A}$ will be the same multiple of A that $\overline{FB+B}$ is of B: but A is equal to $\overline{EA-FA}$; and adding FA to both sides we have $\overline{FA+A}=EA$; therefore instead of saying as before, that $\overline{FA+A}$ is the same multiple of A that $\overline{FB+B}$ is of B, we may now say that EA is the same multiple of A that $\overline{FB+B}$ is of B: but EA is the same multiple of A that EB is of B; therefore EB is the same multiple of B that $\overline{FB+B}$ is of B; therefore EB is equal to $\overline{FB+B}$; subtract FB from both sides, and you will have $\overline{EB-FB}=B$. *Q. E. D.*

CASE

CASE 2.

Let us now ſuppoſe the remainder $\overline{EA-FA}$ to be ſome multiple of A; for if A meaſures both EA and FA, it muſt meaſure $\overline{EA-FA}$; and ſo $\overline{EA-FA}$ muſt be ſome multiple of A; and for the ſame reaſon, the other remainder $\overline{EB-FB}$ muſt be ſome multiple of B: I ſay then in the next place, that $\overline{EB-FB}$ muſt be the ſame multiple of B that $\overline{EA-FA}$ is of A. If this be denied, let G be the ſame multiple of B that $\overline{EA-FA}$ is of A; then ſince $\overline{EA-FA}$ and G are equimultiples of A and B, and ſince FA and FB are alſo other equimultiples of the ſame, it follows from the ſecond propoſition, that the ſum $\overline{EA-FA}+FA$ will be the ſame multiple of A that $\overline{G+FB}$ is of B: but $\overline{EA-FA}+FA = EA$; therefore EA is the ſame multiple of A that $\overline{G+FB}$ is of B: but EA is the ſame multiple of A that EB is of B; therefore EB is the ſame multiple of B that $\overline{G+FB}$ is of B; therefore EB is equal to $\overline{G+FB}$; therefore $\overline{EB-FB}$ is equal to G: but G was the ſame multiple of B that $\overline{EA-FA}$ is of A by the ſuppoſition; therefore $\overline{EB-FB}$ is the ſame multiple of B that $\overline{EA-FA}$ is of A. *Q. E. D.*

SCHOLIUM.

As in the ſecond definition it was provided that no ſimple quantity be conſidered as a multiple of itſelf, ſo in this propoſition care is taken that no two ſimple quantities be conſidered as equimultiples of themſelves; which indeed is but a conſequence of that definition, and is the reaſon why this propoſition reſolves itſelf into two caſes.

For a better underſtanding and remembering the ſtructure of the ſix foregoing propoſitions, it may be obſerved, that the two laſt propoſitions are nothing elſe but the two firſt with their ſigns changed. In the firſt propoſition it was demonſtrated, that the ſum $\overline{EA+EB}$ is the ſame multiple of the ſum $\overline{A+B}$ that EA is of A, or EB of B: in the fifth propoſition it is demonſtrated, that the difference $\overline{EA-EB}$ is the ſame multiple of the difference $\overline{A-B}$ that EA is of A or EB of B. Again, in the ſecond propoſition it was demonſtrated, that the ſum $\overline{EA+FA}$ is the ſame multiple of A that the ſum $\overline{EB+FB}$ is of B; and in the ſixth it is demonſtrated that the remainder $\overline{EA-FA}$ is the ſame multiple of A that the remainder $\overline{EB-FB}$ is of B.

PROPOSITION 7.

272. *If two equal quantities* A *and* B *be compared with a third as* C, *I ſay then, that both* A *and* B *will have the ſame proportion to* C; *and* vice verſa, *that* C *will have the ſame proportion both to* A *and to* B.

For taking any equimultiples of A and B, ſuppoſe $3A$ and $3B$, and any other multiple of C, ſuppoſe $5C$, it is plain that $3A$ muſt be equal to $3B$, becauſe A is equal to B: but if $3A$ be equal to $3B$, then it will be impoſſible for $3A$ to be greater than, equal to, or leſs than $5C$; but $3B$ muſt accordingly be greater than, equal to, or leſs than the ſame $5C$; therefore we have four quantities A, C, B and C, whereof $3A$ and $3B$ repreſent any equimultiples of the firſt and third, and $5C$ and $5C$ any other equimultiples of the ſecond and fourth; and ſince the firſt multiple $3A$ cannot be greater than, equal to, or leſs than the ſecond $5C$, but the third multiple $3B$ muſt accordingly be greater than, equal to, or leſs than the fourth $5C$, it follows from the fifth definition, that theſe four quantities

quantities *A*, *C*, *B* and *C* are proportionable, *A* to *C* as *B* to *C*. *Q. E. D.*

Again, ſince $3A$ is equal to $3B$, it will be impoſſible for $5C$ to be greater than, equal to, or leſs than $3A$, but the ſame $5C$ muſt alſo be greater than, equal to, or leſs than $3B$; therefore we have four quantities *C*, *A*, *C* and *B*, whereof $5C$ and $5C$ repreſent any equimultiples of the firſt and third, and $3A$ and $3B$ any other equimultiples of the ſecond and fourth; and ſince the firſt multiple $5C$ cannot be greater than, equal to, or leſs than the ſecond $3A$, but the third multiple $5C$ muſt alſo be greater than, equal to, or leſs than the fourth $3B$, it follows from the fifth definition, that theſe four quantities *C*, *A*, *C* and *B* muſt be proportionable, *C* to *A* as *C* to *B*. *Q. E. D.*

PROPOSITION 8.

273. *If two unequal quantities* A *and* B, *whereof* A *is the greater, be compared with a third as* C, *I ſay then that* A *will have a greater proportion to* C *than* B *hath to* C; *but that, on the other hand,* C *will have a greater proportion to* B *that it hath to* A.

For ſince by the ſuppoſition, *A* is greater than *B*, $\overline{A-B}$ will be the exceſs of *A* above *B*; and by the fifth propoſition, if *EB* be any multiple of *B*, $\overline{EA-EB}$ will be the ſame multiple of $\overline{A-B}$: multiply then theſe two quantities *B* and $\overline{A-B}$ alike, till of the equimultiples thence ariſing, the leſs ſhall be greater than *C*; then will the other be much greater; let theſe equimultiples be $3B$ and $\overline{3A-3B}$, each being greater than *C*: laſtly multiply *C* till you come to a multiple of it that ſhall be the next greater than $3B$, which multiple let be $5C$; then it is plain that $3B$ cannot be leſs than $4C$; for if it was, then $4C$, and not $5C$ would be the next multiple of *C* greater than $3B$, contrary to the ſuppoſition. Since then $3B$ cannot be leſs than $4C$; it follows, that if to $3B$ be added a

greater quantity, and to $4C$ a leſs, the former ſum will be greater than the latter: but $3A-3B$ is greater than C by the conſtruction; add then $3A-3B$ to $3B$, and C to $4C$, and you will have $3A$ greater than $5C$; but $3B$ is leſs than $5C$ by the conſtruction; therefore we have four quantities A, C, B and C, whereof $3A$ and $3B$ are equimultiples of the firſt and third, and $5C$ and $5C$ are other equimultiples of the ſecond and fourth; and ſince the firſt multiple $3A$ is greater than the ſecond $5C$, and at the ſame time the third multiple $3B$ is not greater than the fourth $5C$, but leſs, it follows from the ſeventh definition, that of the four quantities A, C, B and C, A hath a greater proportion to C than B hath to C. *Q. E. D.*

Again, ſince we have four quantities C, B, C and A, whereof $5C$ and $5C$ are equimultiples of the firſt and third, and $3B$ and $3A$ are other equimultiples of the ſecond and fourth; and ſince the firſt multiple $5C$ is greater than the ſecond $3B$, and at the ſame time the third multiple $5C$ is not greater than the fourth $3A$, but leſs, it follows from the ſeventh definition, that of the four quantities C, B, C and A, C hath a greater proportion to B than C hath to A. *Q. E. D.*

PROPOSITION 9.

274. *If two quantities* A *and* B *have both the ſame proportion to a third as* C, *or if* C *hath the ſame proportion to both* A *and* B; *in either of theſe caſes* A *and* B *muſt be equal to each other.*

For ſhould either of them be greater than the other, ſhould A be greater than B, then by the laſt propoſition, A muſt have a greater proportion to C than B hath to C, contrary to the firſt ſuppoſition; and C muſt have a greater proportion to B than it hath to A, contrary to the ſecond ſuppoſition; therefore A and B muſt be equal to each other. *Q. E. D.*

PROPO

PROPOSITION 10.

275. *If of three quantities* A, B *and* C, A *hath a greater proportion to* C *than* B *hath to* C, *or if* C *hath a greater proportion to* B *than it hath to* A; *in either of theſe caſes* A *muſt be greater than* B.

For was *A* equal to, or leſs than *B*, then either *A* muſt have the ſame proportion to *C* that *B* hath to *C*, as in the ſeventh propoſition, or a leſs as in the eighth, both which contradict the firſt ſuppoſition: and again, was *A* equal to, or leſs than *B*, then either *C* muſt have the ſame proportion to *A* that it hath to *B*, as in the ſeventh propoſition, or a greater as in the eighth, both which contradict the ſecond ſuppoſition; therefore *A* muſt be greater than *B*. *Q. E. D.*

PROPOSITION 11.

276. *If two ratios be the ſame with a third, they muſt be the ſame with one another: as if the ratio of* A *to* a *and the ratio of* C *to* c *be both the ſame with the ratio of* B *to* b, *then the ratio of* A *to* a *will be the ſame with the ratio of* C *to* c: *or thus*; *If* A *be to* a *as* B *to* b, *and* B *to* b *as* C *to* c; *I ſay then that* A *will be to* a *as* C *to* c.

For taking any equimultiples of the antecedents, ſuppoſe $3A$, $3B$, $3C$; and any other equimultiples of the conſequents, ſuppoſe $2a$, $2b$, $2c$, let $3A$ be greater than $2a$; then ſince by the ſuppoſition *A* is to *a* as *B* to *b*, and $3A$ is greater than $2a$, $3B$ muſt be greater than $2b$ by the fifth definition: again, ſince *B* is to *b* as *C* to *c*, and $3B$ is greater than $2b$, $3C$ muſt be greater than $2c$: thus then we ſee that if $3A$ be greater than $2a$, $3C$ muſt neceſſarily be greater than $2c$: and in like manner it may be demonſtrated that if $3A$ be equal to, or leſs than $2a$, $3C$ will accordingly be equal to, or leſs than $2c$. Since then we have four quantities *A*, *a*, *C* and *c*, whereof $3A$ and $3C$ repreſent any equimultiples of the firſt and third,

and $2a$ and $2c$ any other equimultiples of the ſecond and fourth; and ſince $3A$ cannot be greater than, equal to, or leſs than $2a$, but $3C$ muſt accordingly be greater than, equal to, or leſs than $2c$, it follows from the fifth definition that theſe four quantities A, a, C and c muſt be proportionable, A to a as C to c. *Q. E. D.*

PROPOSITION 12.

277. *If ever ſo many quantities* A, B, C *in one ſeries be proportionable to as many* a, b, c *in another, that is,* A *to* a *as* B *to* b *as* C *to* c; *I ſay then, that as any one antecedent is to its conſequent, ſo will the ſum of all the antecedents be to the ſum of all the conſequents; that is, as* A *is to* a *ſo will* $\overline{A+B+C}$ *be to* $\overline{a+b+c}$: *or if we ſuppoſe* $A+B+C=S$, *and* $\overline{a+b+c}=s$, *I ſay then that as* A *is to* a *ſo will* S *be to* s.

For taking any equimultiples of the antecedents, ſuppoſe $3A$, $3B$, $3C$, and any other equimultiples of the conſequents, ſuppoſe $2a$, $2b$, $2c$, let $3A$ be greater than $2a$; then ſince A is to a as B to b, and $3A$ is greater than $2a$, $3B$ muſt be greater than $2b$ by the fifth definition: again, ſince B is to b as C to c, and $3B$ is greater than $2b$, $3C$ muſt be greater than $2c$: therefore if $3A$ be greater than $2a$, not only $3B$ will be greater than $2b$, but alſo $3C$ will be greater than $2c$, and conſequently the whole ſum $\overline{3A+3B+3C}$ will be greater than the whole ſum $\overline{2a+2b+2c}$: but by the firſt propoſition, the ſum $\overline{3A+3B+3C}$ is the ſame multiple of the ſum $\overline{A+B+C}$ or S that $3A$ is of A; therefore $\overline{3A+3B+3C}=3S$; and for the ſame reaſon $\overline{2a+2b+2c}=2s$; therefore we may now ſay that if $3A$ be greater than $2a$, $3S$ will be greater than $2s$: and after the ſame manner might it be demonſtrated, that if $3A$ be equal to, or leſs than

2a, 3*S* will be equal to, or leſs than 2*s*. Since then we have four quantities *A*, *a*, *S* and *s*, whereof 3*A* and 3*S* repreſent any equimultiples of the firſt and third, and 2*a* and 2*s* any others of the ſecond and fourth; and ſince 3*A* cannot be greater than, equal to, or leſs than 2*a* but 3*S* muſt in like manner be greater than, equal to, or leſs than 2*s*, it follows from the fifth definition that theſe four quantities *A*, *a*, *S* and *s* muſt be proportionable, *A* to *a* as *S* to *s*. *Q. E. D.*

PROPOSITION 13.

278. *If* A *hath the ſame proportion to* a *that* B *hath to* b, *but* B *hath a greater proportion to* b *than* C *hath to* c; *I ſay then that* A *hath a greater proportion to* a *than* C *to* c.

For ſince by the ſuppoſition *B* is to *b* in a greater proportion than *C* to *c*, it follows from the ſeventh definition that there are equimultiples of *B* and *C*, and others again of *b* and *c*, of ſuch a nature that *B's* multiple ſhall exceed that of *b*, and at the ſame time *C's* multiple ſhall not exceed that of *c*: let then 3*B* exceed 2*b*, and let 3*C* not exceed 2*c*; then ſince *A* is to *a* as *B* to *b*, and 3*B* exceeds 2*b*, 3*A* muſt neceſſarily exceed 2*a* by the fifth definition; therefore we have four quantities *A*, *a*, *C* and *c*, whereof 3*A* and 3*C* are equimultiples of the firſt and third, and 2*a* and 2*c* are other equimultiples of the ſecond and fourth; and ſince 3*A* exceeds 2*a* when 3*C* does not exceed 2*c*, it follows from the ſeventh definition that of theſe four quantities *A*, *a*, *C* and *c*, *A* hath a greater proportion to *a* than *C* hath to *c*. *Q. E. D.*

PROPOSITION 14.

279. *If four homogeneous quantities be proportionable, the firſt to the ſecond as the third to the fourth; I ſay then that the ſecond will be greater than, equal to, or leſs than the fourth, according as the firſt is greater than,*

than, equal to, or leſs than the third: as if A *be to* B *as* C *is to* D; *I ſay then that* B *will be greater than, equal to, or leſs than* D, *according as* A *is greater than, equal to, or leſs than* C.

CASE 1.

Let *A* be greater than *C:* I ſay then that *B* will be greater than *D*. For ſince *A* is greater than *C*, *A* will have a greater proportion to *B* than *C* hath to *B* by the eighth propoſition: again, ſince *C* is to *D* as *A* to *B*, and *A* hath a greater proportion to *B* than *C* hath to *B*, it follows from the laſt propoſition that *C* is to *D* in a greater proportion than *C* to *B*; therefore by the tenth propoſition *B* is greater than *D*. *Q. E. D.*

CASE 2.

Let now *A* be leſs than *C:* I ſay then that *B* will be leſs than *D*. For if *A* be leſs than *C*; then *C* will be greater than *A:* ſince then *C* is to *D* as *A* is to *B ex hypotheſi*, and *C* is greater than *A*, it follows from the laſt caſe that *D* will be greater than *B*; and therefore *B* will be leſs than *D*. *Q. E. D.*

CASE 3.

Laſtly, let *A* be equal to *C:* I ſay then that *B* will be equal to *D*. For ſince *A* is equal to *C*, *A* will be to *B* as *C* is to *B* by the ſeventh propoſition; but *C* is to *D* as *A* to *B* by the ſuppoſition; therefore *C* is to *D* as *C* is to *B* by the eleventh propoſition; therefore *B* and *D* are equal by the ninth. *Q. E. D.*

PROPOSITION 15.

280. *Parts are in the ſame proportion with their reſpective equimultiples. Let* A *and* a *be any two homogeneous quantities, whereof* 3A *and* 3a *repreſent any equimultiples reſpectively; I ſay then, that* A *will be to* a *as* 3A *to* 3a.

For

For take B and C both equal to A, and alſo b and c both equal to a; then by the ſeventh propoſition we ſhall have A to a as B to b as C to c; therefore by the twelfth propoſition we ſhall have A to a as $\overline{A+B+C}$ to $\overline{a+b+c}$: but in this caſe $\overline{A+B+C}=3A$, and $\overline{a+b+c}=3a$; therefore A is to a as $3A$ is to $3a$. *Q. E. D.*

PROPOSITION 16.

281. *If four homogeneous quantities be proportionable, the firſt to the ſecond as the third to the fourth; I ſay then that they will alſo be alternately proportionable, that is, the firſt to the third as the ſecond to the fourth: as if* A *be to* B *as* C *to* D; *I ſay then that* A *will be to* C *as* B *to* D.

For, taking any equimultiples of A and B, ſuppoſe $3A$ and $3B$, and any others of C and D, ſuppoſe $2C$ and $2D$; ſince $3A$ is to $3B$ as A to B by the laſt, and A is to B as C to D by the ſuppoſition, and C is to D as $2C$ to $2D$ by the laſt; it follows from the 11th propoſition that $3A$ is to $3B$ as $2C$ to $2D$; therefore by the 14th propoſition, $3A$ cannot be greater than, equal to, or leſs than $2C$, but at the ſame time $3B$ muſt be greater than, equal to, or leſs than $2D$. Since then we have four quantities A, C, B and D, whereof $3A$ and $3B$ repreſent any equimultiples of the firſt and third, and $2C$ and $2D$ any other equimultiples of the ſecond and fourth; and ſince $3A$ cannot be greater than, equal to, or leſs than $2C$, but $3B$ muſt accordingly be greater than, equal to, or leſs than $2D$, it follows from the fifth definition that theſe four quantities A, C, B and D, muſt be proportionable, A to C as B to D. *Q. E. D.*

Note, Alternate proportion can have no place, except where all the quantities A, B, C and D, are of the ſame kind: for if A and B were of one kind, and C and D of another, how would it be poſſible for the quantities

quantities *A* and *C*, or *B* and *D*, to have any proportion one to another, much leſs the ſame?

PROPOSITION 17.

282. *If four quantities* A, B, C *and* D, *whereof* A *is greater than* B, *and* C *greater than* D, *be proportionable,* A *to* B *as* C *to* D; *I ſay then that* $\overline{A-B}$ *will be to* B *as* $\overline{C-D}$ *is to* D, *which is called proportion by diviſion.*

For let $3A$, $3B$, $3C$ and $3D$, be any equimultiples of the quantities A, B, C and D; then will $\overline{3A-3B}$ and $\overline{3C-3D}$ be like multiples of $\overline{A-B}$ and $\overline{C-D}$. Again, let $2B$ and $2D$ be any other equimultiples of B and D, and let $\overline{3A-3B}$ be greater than $2B$; then if $3B$ be added to both ſides, we ſhall have $3A$ greater than $5B$; and becauſe A is to B as C is to D, we ſhall have, by the fifth definition, $3C$ greater than $5D$; take $3D$ from both ſides, and you will have $\overline{3C-3D}$ greater than $2D$; therefore if $\overline{3A-3B}$ be greater than $2B$, $\overline{3C-3D}$ muſt be greater than $2D$: and by a like proceſs it may be demonſtrated, that if $\overline{3A-3B}$ be equal to, or leſs than $2B$, $\overline{3C-3D}$ will be equal to, or leſs than $2D$. Since then we have four quantities, $\overline{A-B}$, B, $\overline{C-D}$ and D, whereof $\overline{3A-3B}$ and $\overline{3C-3D}$ repreſent any equimultiples of the firſt and third, and $2B$ and $2D$ any other equimultiples of the ſecond and fourth; and ſince $\overline{3A-3B}$ cannot be greater than, equal to, or leſs than $2B$, but at the ſame time $\overline{3C-3D}$ muſt accordingly be greater than, equal to, or leſs than $2D$, it follows from the fifth definition that theſe four quantities $\overline{A-B}$, B, $\overline{C-D}$ and D muſt be proportionable, $\overline{A-B}$ to B as $\overline{C-D}$ to D. *Q. E. D.*

PRO-

PROPOSITION 18.

283. *If four quantities* A, B, C *and* D *be proportionable,* A *to* B *as* C *to* D; *I ſay then that* $\overline{A+B}$ *will be to* B *as* $\overline{C+D}$ *to* D, *which is called proportion by compoſition.*

If this be denied, that $A+B$ is to B as $C+D$ is to D, it muſt then be allowed that $A+B$ is to B as $C+D$ is to ſome quantity either greater or leſs than D; ſuppoſe to a greater, and call it E; then ſince E is by the ſuppoſition greater than D, if $C-E$ be added to both ſides, we ſhall have C greater than $\overline{C+D-E}$. This being obſerved, let us begin again, and ſuppoſe $A+B$ to B as $C+D$ to E; then we ſhall have *dividendo* (that is, by the laſt propoſition) $\overline{A+B-B}$ to B as $\overline{C+D-E}$ to E; but $\overline{A+B-B}$ is equal to A; therefore A is to B as $\overline{C+D-E}$ is to E; but A is to B as C is to D by the ſuppoſition; therefore C is to D as $\overline{C+D-E}$ is to E; but of theſe four proportionals C, D, $\overline{C+D-E}$ and E, it has been proved that the firſt is greater than the third, that C is greater than $\overline{C+D-E}$; therefore, by the fourteenth, the ſecond muſt be greater than the fourth, that is, D muſt be greater than E; therefore E muſt be leſs than D; therefore if $A+B$ be to B as $C+D$ is to any quantity greater than D, that quantity muſt alſo be leſs than D, which is impoſſible; therefore it is impoſſible for $A+B$ to be to B as $C+D$ is to any quantity greater than D: and by a like proceſs it may be demonſtrated, that it is as impoſſible for $A+B$ to be to B as $C+D$ is to any quantity leſs than D; therefore $A+B$ muſt be to B as $C+D$ is to D. Q. E. D.

PROPO-

PROPOSITION 19.

284. *If from two quantities* A *and* B *in any proportion be ſubtracted other two* C *and* D *in the ſame proportion; I ſay then that the remainders* A—C *and* B—D *will ſtill be in the ſame proportion, that is, that* A—C *will be to* B—D *as* A *to* B *or as* C *to* D.

For ſince by the ſuppoſition *A* is to *B* as *C* is to *D*, we ſhall have *permutando* (that is, by the ſixteenth propoſition,) *A* to *C* as *B* to *D*; and *dividendo*, *A*—*C* to *C* as *B*—*D* to *D*; and again *permutando*, *A*—*C* to *B*—*D* as *C* is to *D*; but *A* is to *B* as *C* is to *D*; therefore *A*—*C* is to *B*—*D* as *A* to *B*. *Q. E. D.*

SCHOLIUM.

Here Doctor *Gregory* in his manuſcript copy finds a corollary demonſtrating that illation called converſion of proportion; but becauſe it is difficult to make ſenſe of that demonſtration, I chuſe rather to inſert his own demonſtration of the ſame propoſition, which is as follows:

If four quantities A, B, C *and* D, *be proportionable*, A *to* B *as* C *to* D; *I ſay then that* A *is to* A—B *as* C *is to* C—D, *which is called converſion of proportion.* For ſince by the ſuppoſition *A* is to *B* as *C* is to *D*, we ſhall have *dividendo*, *A*—*B* to *B* as *C*—*D* to *D*; and *invertendo*, *B* to *A*—*B* as *D* to *C*—*D*; and *componendo*, *B*+*A*—*B* to *A*—*B* as *D*+*C*—*D* to *C*—*D*, that is, *A* to *A*—*B* as *C* to *C*—*D*. *Q. E. D.*

As to the foregoing nineteenth propoſition I ſhall further obſerve, that as in that propoſition, by diviſion of proportion it was demonſtrated, that if from two quantities *A* and *B* in any proportion be ſubtracted two others *C* and *D* in the ſame proportion, the remainders *A*—*C* and *B*—*D* will ſtill be in the ſame proportion with *A* and *B*; ſo by compoſition of proportion it may be demonſtrated, that if to two quantities *A* and *B* in any proportion be added

two

two others C and D in the same proportion, the aggregates $A+C$ and $B+D$ will still be in the same proportion with A and B; but this has already been demonstrated, being a particular case of the twelfth proposition.

PROPOSITION 20.

285. *If there be three quantities* A, B *and* C *in one series, and three others* D, E *and* F *in another, and if the proportions in one series be the same with the proportions in the other when taken in the same order, as if* A *be to* B *as* D *is to* E, *and* B *to* C *as* E *to* F; *I say then that* A *cannot be greater than, equal to, or less than* C *in one series, but accordingly* D *must be greater than, equal to, or less than* F *in the other.*

For let A be greater than C; then it is plain from the eighth proposition that A must have a greater proportion to B than C hath to B; but A is to B as D to E by the supposition, and C is to B as F to E, because by the supposition B is to C as E to F; therefore D hath a greater proportion to E than F hath to E; therefore D is greater than F by the tenth proposition; therefore if A be greater than C, D must be greater than F: and after the same manner it may be demonstrated, that if A be equal to, or less than C, D must accordingly be equal to, or less than F; therefore A cannot be greater than, equal to, or less than C, but accordingly D must be greater than, equal to, or less than F. *Q. E. D.*

PROPOSITION 21.

286. *If there be three quantities* A, B *and* C *in one series, and three others* D, E *and* F *in another, and if the proportions in one series be the same with the proportions in the other, but in a different order, as if* A *be to* B *as* E *is to* F, *and* B *to* C *as* D *is to* E; *I say still that* A *cannot be greater than, equal to, or less than* C, *but accordingly* D *must be greater than, equal to, or less than* F.

For let *A* be greater than *C*; then by the eighth propoſition *A* muſt have a greater proportion to *B* than *C* hath to *B*: but *A* is to *B* as *E* is to *F* by the ſuppoſition, and *C* is to *B* as *E* to *D*, becauſe by the ſuppoſition *B* is to *C* as *D* to *E*; therefore *E* hath a greater proportion to *F* than it hath to *D*; therefore *D* muſt be greater than *F* by the tenth propoſition; therefore if *A* be greater than *C*, *D* muſt be greater than *F*: and by a like way of reaſoning, if *A* be equal to, or leſs than *C*, *D* will accordingly be equal to, or leſs than *F*; therefore *A* cannot be greater than, equal to, or leſs than *C*, but accordingly *D* muſt be greater than, equal to, or leſs than *F*. *Q. E. D.*

PROPOSITION 22.

287. *If there be three quantities* A, B *and* C *in one ſeries, and three others* D, E *and* F *in another, and if the proportions in one ſeries be the ſame with the proportions in the other when taken in the ſame order; I ſay then that the extremes in one ſeries will be in the ſame proportion with the extremes in the other: as if* A *be to* B *as* D *is to* E, *and* B *to* C *as* E *to* F; *I ſay then that* A *will be to* C *as* D *to* F.

Note, For avoiding a multiplicity of words, this conſequence is ſaid to follow *ex æquo ordinate*, or *ex æquo:* ſee the eighteenth and nineteenth definitions.

Take any equimultiples of *A* and *D*, ſuppoſe $4A$ and $4D$, and any others of *B* and *E*, ſuppoſe $3B$ and $3E$, and laſtly any others of *C* and *F*, as $2C$ and $2F$; then ſince by the ſuppoſition *A* is to *B* as *D* is to *E*, it follows from the fourth propoſition that $4A$ will be to $3B$ as $4D$ to $3E$: again, ſince by the ſuppoſition *B* is to *C* as *E* to *F*, it follows from the ſame fourth propoſition that $3B$ will be to $2C$ as $3E$ to $2F$: ſo that we have three quantities, to wit $4A$, $3B$, $2C$ in one ſeries, and three others, to wit $4D$, $3E$ and $2F$ in another; and it has been ſhewn that the proportions in one ſeries are the ſame with the proportions

in

in the other when taken in the same order, that is, $4A$ is to $3B$ as $4D$ to $3E$, and $3B$ to $2C$ as $3E$ to $2F$; therefore, by the twentieth proposition, $4A$ cannot be greater than, equal to, or less than $2C$, but $4D$ must accordingly be greater than, equal to, or less than $2F$. Since then we have four quantities A, C, D and F, whereof $4A$ and $4D$ represent any equimultiples of the first and third, and $2C$ and $2F$ any other equimultiples of the second and fourth; and since $4A$ cannot be greater than, equal to, or less than $2C$, but accordingly $4D$ must be greater than, equal to, or less than $2F$, it follows from the fifth definition that these four quantities A, C, D and F are proportionable, A to C as D to F. *Q. E. D.*

COROLLARY.

In like manner, if there be ever so many quantities A, B, C, G, &c. *in one series, and as many others* D, E, F, H, &c. *in another, and if* A *be to* B *as* D *is to* E, *and* B *to* C *as* E *to* F, *and* C *to* G *as* F *to* H, &c. *the consequence with respect to the extremes will still be the same, that is,* A *will be to* G *as* D *to* H: for it has been proved already that A is to C as D to F; and by the supposition C is to G as F to H; therefore, *ex æquo*, A will be to G as D to H.

PROPOSITION 23.

288. *If there be three quantities* A, B *and* C *in one series, and three others* D, E *and* F *in another, and if the proportions in one series be the same with the proportions in the other, but in a different order; I say that the extremes in one series will still be in the same proportion with the extremes in the other: as if* A *be to* B *as* E *is to* F, *and* B *to* C *as* D *to* E; *I say still that* A *will be to* C *as* D *to* F.

Note. This consequence is said to be *ex æquo perturbate.*

Take any equimultiples of A, B and D, suppose $3A$, $3B$ and $3D$, and any others of C, E and F, sup-

poſe $2C$, $2E$ and $2F$, and the reaſoning is as follows: $3A$ is to $3B$ as A to B by the fifteenth, and A is to B as E to F by the ſuppoſition, and E is to F as $2E$ to $2F$ by the fifteenth; therefore $3A$ is to $3B$ as $2E$ is to $2F$ by the eleventh: again, B is to C as D to E by the ſuppoſition; therefore $3B$ will be to $2C$ as $3D$ to $2E$ by the fourth: ſince then we have three quantities, to wit, $3A$, $3B$ and $2C$ in one ſeries, and three others, to wit, $3D$, $2E$ and $2F$ in another, and ſince the proportions are the ſame in both ſerieſes, but in a different order, that is, ſince $3A$ is to $3B$ as $2E$ to $2F$, and $3B$ is to $2C$ as $3D$ to $2E$, it follows from the twenty-firſt propoſition, that $3A$ cannot be greater than, equal to, or leſs than $2C$, but $3D$ muſt accordingly be greater than, equal to, or leſs than $2F$: again, ſince we have four quantities A, C, D and F, whereof $3A$ and $3D$ repreſent any equimultiples of the firſt and third, and $2C$ and $2F$ any others of the ſecond and fourth, and ſince $3A$ cannot be greater than, equal to, or leſs than $2C$, but $3D$ muſt accordingly be greater than, equal to, or leſs than $2F$, it follows from the fifth definition that theſe four quantities A, C, D and F are proportionable, A to C as D to F. *Q. E. D.*

PROPOSITION 24.

289. *If there be ſix quantities* A, B, C, D, E, F, *whereof* A *is to* B *as* C *is to* D, *and* E *is to* B *as* F *to* D; *I ſay then that* A+E *will be to* B *as* C+F *to* D.

For ſince by the ſuppoſition E is to B as F to D, we ſhall have, *invertendo*, B to E as D to F. Since then A is to B as C is to D by the ſuppoſition, and B is to E as D to F, it follows *ex æquo*, that A is to E as C to F; whence, *componendo*, $A+E$ will be to E as $C+F$ is to F: again, ſince $A+E$ is to E as $C+F$ is to F, and E is to B as F to D by the ſuppoſition, it follows again *ex æquo*, that $A+E$ is to B as $C+F$ to D. *Q. E. D.*

LEMMA.

LEMMA.

290. *If four quantities* A, B, C *and* D *be proportionable,* A *to* B *as* C *to* D; *I ſay then that* A *cannot poſſibly be greater than, equal to, or leſs than* B, *but that* C *will accordingly be greater than, equal to, or leſs than* D.

That this lemma is ſelf-evident according to the common notion of proportionality, or even upon the plan of the fifth definition, were ſimple quantities allowed to be conſidered as equimultiples of themſelves, is what I ſuppoſe will ſcarcely be denied: but this the name of multiple and equimultiple will by no means admit of, and therefore care has been taken to provide againſt it, as may be ſeen in my obſervations on the ſecond definition, and at the end of the ſixth propoſition: therefore, as the doctrine of proportion here ſtands, this lemma ought certainly to be demonſtrated; and the author's taking it for granted in the demonſtration of the next propoſition following, where he might with ſo much eaſe have avoided it, is not ſo much an argument of its ſelf-evidency, as that he had demonſtrated it ſomewhere before in this fifth book, but that it is now loſt. *Commandine*, from the fourteenth of this book, has demonſtrated one particular caſe of this propoſition, that is, where the quantities *A*, *B*, *C* and *D* are all of a kind: but this propoſition is no leſs true when the quantities *A* and *B* are of one kind, and *C* and *D* of another. This *Clavius* very well obſerves, and endeavours to demonſtrate this propoſition in this more extended ſenſe (ſee his ſcholium to the fourteenth propoſition of the fifth book;) but whether this demonſtration of his amounts to any more than proving *idem per idem*, let them that read it judge. The demonſtration I ſhall here give of it is as follows:

I am to demonſtrate that if *A* be to *B* as *C* is to *D*; then *A* cannot poſſibly be greater than, equal to,

or leſs than B, but accordingly C muſt be greater than, equal to, or leſs than D.

CASE 1.

Let A be greater than B; I ſay then that C muſt be greater than D. For ſince A is greater than B, multiply the exceſs $A-B$ to a multiple greater than B, and let this multiple be $3A-3B$; then ſince $3A-3B$ is greater than B, if $3B$ be added to both ſides, we ſhall have $3A$ greater than $4B$: again, ſince A is to B as C is to D, and $3A$ is greater than $4B$, we ſhall have, by the fifth definition, $3C$ greater than $4D$; therefore $3C$ muſt be much greater than $3D$, and C muſt be greater than D. *Q. E. D.*

CASE 2.

Let now A be leſs than B; I ſay then that C muſt be leſs than D. For ſince A is to B as C is to D, we ſhall have, *invertendo*, B to A as D to C; but B is greater than A, becauſe by the ſuppoſition A is leſs than B; therefore D muſt be greater than C by the laſt caſe; therefore C muſt be leſs than D. *Q. E. D.*

CASE 3.

Laſtly, let A be equal to B; I ſay then that C muſt be equal to D. For ſince C is to D as A is to B, ſhould C be greater or leſs than D, A would accordingly be greater or leſs than B by the two laſt caſes; but A is neither greater nor leſs than B by the ſuppoſition; therefore C is neither greater nor leſs than D; therefore C is equal to D. *Q. E. D.*

PROPOSITION 25.

291. *If four quantities* A. B, C *and* D *be proportionable,* A *to* B *as* C *to* D; *I ſay then that the ſum of the greateſt and leaſt terms put together will be greater than the ſum of the other two.*

Let

Let A be the greateſt of all; then, ſince A is to B as C is to D, and B is leſs than A, D will be leſs than C by the lemma: again, ſince A is to B as C is to D, and C is leſs than A, D will be leſs than B by the fourteenth; therefore if A be the greateſt of all, D, which is leſs than either A, B or C, will be the leaſt of all, and ſo the ſum of the greateſt and leaſt terms added together will be $A+D$; therefore the ſum of the other two will be $B+C$. We are now then to prove that the ſum $A+D$ is greater than the ſum $B+C$, which is thus done: It has been demonſtrated in the nineteenth propoſition, that if from two quantities A and B in any proportion whatever, be ſubtracted other two C and D in the ſame proportion, the remainder $A-C$ will be to the remainder $B-D$ as A to B; but A is greater than B by the ſuppoſition; therefore $A-C$ muſt be greater than $B-D$ by the lemma; add $C+D$ to both ſides, and you will have $A+D$ greater than $B+C$. *Q. E. D.*

COROLLARY.

If three quantities A, B *and* C *be in continual proportion,* A *to* B *as* B *to* C; *I ſay then that the ſum of the extremes will be greater than twice the middle term, that* A+C *will be greater than* B+B *or* 2B.

Of the COMPOSITION and RESOLUTION of RATIOS.

N. B. As numbers are quantities whereof we have more diſtinct ideas than of any other quantities whatever, and as all ratios muſt be reduced to thoſe of numbers before we can make any conſiderable uſe of their compoſition and reſolution in computing the quantities of time, ſpace, velocity, motion, force, *&c.* I ſhall confine myſelf chiefly to this ſort of ratios in what I have to deliver in the following articles.

DEFINITION I.

292. *In comparing ratios, that ratio is ſaid to be greater than, equal to, or leſs than another, whoſe antecedent hath a greater, or an equal, or a leſs proportion to its conſequent than the other's antecedent hath to its conſequent.* Thus the ratio of 6 to 3 is ſaid to be greater, and the ratio of 4 to 3 leſs than the ratio of 5 to 3; thus again the ratio of 6 to 3 is ſaid to be greater, and the ratio of 6 to 5 leſs than the ratio of 6 to 4, *&c. Therefore whenever two ratios are to be compared whoſe antecedents and conſequents are both different, it will be proper to reduce them to the ſame antecedent or to the ſame conſequent before the compariſon is made.* As for inſtance; ſuppoſe any one would know which of theſe two ratios is the greater, to wit, the ratio of 7 to 5, or the ratio of 4 to 3: to know this, it will be proper to ſet off one of the ratios: ſuppoſe that of 4 to 3, from 7 the antecedent of the other (by which phraſe I mean no more than finding a number to which 7 hath the ſame proportion that 4 hath to 3;) and this may be done by ſaying, as 4 is to 3, ſo is 7 to $\frac{21}{4}$, or $5\frac{1}{4}$: thus then it appears that the proportion of 4 to 3 is the ſame with the proportion of 7 to $5\frac{1}{4}$; ſo that now the queſtion turns upon this, which of theſe two ratios is the greater, that of 7 to 5, or that of 7 to $5\frac{1}{4}$? and the anſwer is ready, to wit, that the ratio of 7 to 5 is the greater ratio, by the eighth propoſition of the fifth book of the elements; therefore the ratio of 7 to 5 is greater than the ratio of 4 to 3. Again, ſuppoſe I would compare the ratio of 3 to 4 with the ratio of 5 to 7; then I would ſet off the ratio of 3 to 4 from 5, by ſaying, as 3 is to 4, ſo is 5 to $\frac{20}{3}$, or $7-\frac{1}{3}$; whereby it appears that the ratio of 3 to 4 is the ſame with the ratio of 5 to $7-\frac{1}{3}$; but the proportion of 5 to $7-\frac{1}{3}$ is greater than the propor-

proportion of 5 to 7, as is evident from the eighth propoſition of the fifth book of the elements, and alſo from the very nature of ratios, the number 5 having more magnitude when compared with $7-\frac{1}{3}$ than it hath when compared with 7; therefore the ratio of 3 to 4 is greater than the ratio of 5 to 7.

There is alſo another way of comparing ratios, by turning their terms into fractions, making the antecedents numerators, and the conſequents denominators. Thus the ratio of A to B is greater than, equal to, or leſs than the ratio of C to D, according as the fraction $\frac{A}{B}$ is greater than, equal to, or leſs than, the fraction $\frac{C}{D}$: for the ratio of $\frac{A}{B}$ to 1 is greater than, equal to, or leſs than, the ratio of $\frac{C}{D}$ to 1, according as the fraction $\frac{A}{B}$ is greater than, equal to, or leſs than, the fraction $\frac{C}{D}$; this is evident from what has been laid down already: but the ratio of $\frac{A}{B}$ to 1 is the ſame with the ratio of A to B, and the ratio of $\frac{C}{D}$ to 1 is the ſame with the ratio of C to D; therefore the ratio of A to B is greater than, equal to, or leſs than, the ratio of C to D according as the fraction $\frac{A}{B}$ is greater than, equal to, or leſs than, the fraction $\frac{C}{D}$. But this way of repreſenting ratios by fractions, though it may ſerve well enough for comparing them as to greater and leſs, yet it ought not by any means to be admitted in general, becauſe theſe repreſentatives are not in the ſame proportion with the ratios repreſented by them: thus the fraction $\frac{6}{2}$ is double of the fraction $\frac{3}{2}$, but yet it muſt

by no means be concluded from thence that the ratio of 6 to 2 is double of the ratio of 3 to 2; for it will be found hereafter that the ratio of 9 to 4 is double of the ratio of 3 to 2. For my own part, I never was a favourer of repreſenting ratios by fractions, or even fraction-wiſe, as is done by *Barrow* and others; not only for the reaſons above given, but alſo becauſe that this way of repreſenting ratios is very apt to miſlead beginners into wrong conceptions of their compoſition and reſolution.

Definition 2.

293. *In a ſeries of quantities of any kind whatſoever increaſing or decreaſing from the firſt to the laſt, the ratio of the extremes is ſaid to be compounded of all the intermediate ratios.* Thus if *A*, *B*, *C*, *D* repreſent any number of quantities put down (or imagined to be put down) in a ſeries, the ratio of *A* to *D* is ſaid to be compounded of, or to be reſolvable into theſe ratios, to wit, the ratio of *A* to *B*, the ratio of *B* to *C*, and the ratio of *C* to *D*: or thus; *If* A *and* D *be any two quantities, and if* B, C, &c. *repreſent any number of other intermediate quantities interpoſed at pleaſure between* A *and* D, *the ratio of* A *to* D *is ſaid by this interpoſition to be reſolved into the ratios of* A *to* B, *of* B *to* C, *and of* C *to* D.

A, *B*, *C*, *D*, 48, 40, 30, 15,

This is no propoſition to be proved, but a definition laid down of what Mathematicians commonly mean by the compoſition and reſolution of ratios, which is certainly no more than what they mean by compoſition and reſolution in the caſe of any other *continuum* whatever. As for inſtance; ſuppoſe the letters *A*, *B*, *C*, *D*, inſtead of repreſenting quantities, to repreſent ſo many diſtinct points placed in a right line one after another, whether at equal or unequal diſtances it matters not: who then would ſcruple to ſay that the whole interval *AD* conſiſted of the intervals *AB*, *BC*, *CD*, as of its parts? Or, if the points

A and

A and *D* be the extremities of a line, and any number of points *B*, *C*, *&c.* be marked at pleaſure upon it; who will not ſay that the line *AD* is by theſe points reſolved or diſtinguiſhed into the parts *AB*, *BC*, *CD*, *&c.*? This is the caſe in the compoſition and reſolution of lines; and I ſee no difference when applied to the compoſition and reſolution of ratios, except that here the whole and all its parts are lines, and there the whole and all its parts are ratios.

If *A*, *B*, *C*, *D*, *&c.* ſignify quantities, the ratio of *A* to *B* begins at *A* and terminates in *B*; the ratio of *B* to *C* begins at *B* where the former left off, and terminates in *C*; and the ratio of *C* to *D* begins at *C* and terminates in *D*: why then ſhould not theſe continued ratios be conceived as parts conſtituting the whole ratio of *A* to *D*? That ratios are capable of being compared as to greater and leſs, and that one ratio may be greater than, equal to, or leſs than another, we have ſeen already; and if ſo, why ſhould not ratios be allowed to have quantity as well as all other things that are capable of being ſo compared? but if ratios have quantity, they muſt have parts, and theſe parts muſt be of the ſame nature with the whole, becauſe ratios are not capable of being compared with any thing but ratios: therefore I do not ſee but that the idea I have here given of the compoſition and reſolution of ratios is as juſt and as intelligible as it is when applied to any other compoſition or reſolution whatſoever.

To proceed then: let *A*, *B*, *C*, *D* be points in a right line as before; let the line *AB* be equal to any line *Rr*, let *BC* be equal to ſome other line *Ss*, and *CD* to the line *Tt*; then it will not only be proper to ſay that the line *AD* is equal to the three lines *AB*, *BC*, *CD*, but alſo that the ſame line *AD* is equal to the three lines *Rr*, *Ss* and *Tt* put together: and the ſame conſideration is ſtill applicable to ratios; for ſuppoſing *A*, *B*, *C*, *D*, again to ſignify quantities, as alſo *R*, *S*, *T*, *r*, *s*, *t*; let *A* be to *B* as *R* to *r*, let *B* be

to

to C as S to s, and let C be to D as T to t; then it is uſual amongſt Mathematicians not only to conſider the ratio of A to D as compounded of the leſſer ratios of A to B, of B to C, and of C to D, but alſo as compounded of the ratios of R to r, of S to s, and of T to t. All this will be very intelligible, if we attend to the ſeries already deſcribed; for there the ratio of 48 to 15 was compounded of the ratio of 48 to 40, of 40 to 30, and of 30 to 15; but 48 is to 40 as 6 to 5, and 40 is to 30 as 4 to 3, and 30 is to 15 as 2 to 1; therefore it is as proper to conſider the ratio of 48 to 15 as compounded of the ratios of 6 to 5, of 4 to 3, and of 2 to 1, as it is to conſider it as compounded of the ratios of 48 to 40, of 40 to 30, and of 30 to 15.

Definition 3.

294. *As when a line is divided into any number of equal parts, the whole line is ſaid to be ſuch a multiple of any one of theſe parts as is expreſſed by the number of parts into which the whole is ſuppoſed to be divided; ſo in a ſeries of continual proportionals, where the intermediate ratios are all equal to one another, and conſequently to ſome common ratio that indifferently repreſents them all, the ratio of the extremes is ſaid to be ſuch a multiple of this common ratio as is expreſſed by the number of ratios from one extreme to the other.* Thus 9, 6 and 4 are continual proportionals whoſe common ratio is that of 3 to 2; for 9 is to 6 as 3 to 2, and 6 is to 4 as 3 to 2; therefore, in this caſe, the ratio of 9 to 4 is ſaid to be the double of the ratio of 3 to 2; and on the other hand, the ratio of 3 to 2 is ſaid to be the half of the ratio of 9 to 4; but the common expreſſion is, that 9 is to 4 in a duplicate ratio of 3 to 2, and 3 is to 2 in a ſubduplicate ratio of 9 to 4. Again, 27, 18, 12 and 8 are in continual proportion, whoſe common ratio is that of 3 to 2; therefore 27 is to 8 in a triplicate ratio of 3 to 2, and 3 is to 2 in a ſubtriplicate ratio of 27 to 8. Laſtly, 81, 54, 36, 24 and

and 16 are continual proportionals, whoſe common ratio is that of 3 to 2; therefore 81 is to 16 in a quadruplicate ratio of 3 to 2, and 3 is to 2 in a ſubquadruplicate ratio of 81 to 16. By theſe inſtances we ſee that one ratio may not only be greater or leſs than another, but a multiple, or an aliquot part of another; nay there is no proportion can be aſſigned which ſome one ratio may not have to another: thus the ratio of 81 to 16 is found to be to the ratio of 27 to 8, as 4 to 3, becauſe the former ratio contains the ratio of 3 to 2 four times, and the latter three times; thus again, the ratio of 27 to 8 is to the ratio of 9 to 4, as 3 to 2, becauſe the former contains the ratio of 3 to 2 three times, and the latter twice; whereby it appears that proportion is competible even to ratios themſelves, as well as to all other continued quantities whatever. But though all ratios are in ſome certain proportion one to another, yet this proportion cannot always be expreſſed; I mean, when the quantities of ratios are incommenſurable to one another; for ratios may be incommenſurable as well as any other continued quantities of what kind ſoever: thus the ratio of 4 to 3 is incommenſurable to the ratio of 3 to 2; which is the caſe of moſt ratios, though not of all. If all ratios were commenſurable to one another, their logarithms would be ſo too; and ſo the logarithms of all the natural numbers might be accurately aſſigned; whereas from other principles we know to the contrary, as will be ſeen when we come to treat particularly of logarithms.

N. B. The beſt way of repreſenting the quantities of ratios, that I know of, is by *Gunter's* line, where as many of the natural numbers as can be placed upon it are diſpoſed, not at equal diſtances one from another, but at diſtances proportionable to the ratios they are in one to another. Thus the diſtance between 1 and 2 is equal to the diſtance between 2 and 4, becauſe the ratio of 1 to 2 is equal to the ratio of

2 to

2 to 4: thus again, the diſtance between 4 and 9 is double the diſtance between 2 and 3, becauſe the ratio of 4 to 9 is double the ratio of 2 to 3; and ſo of the reſt.

Of the addition of ratios.

295. Since all ratios are quantities, as has been ſhewn in the three laſt articles, it follows, that they alſo as well as all other quantities muſt be capable of addition, ſubtraction, multiplication, and diviſion: to treat then of theſe operations in their order, I ſhall begin firſt with addition.

If the ratios to be added to be continued ratios, that is, if they lie in a ſeries wherein the antecedent of every ſubſequent ratio is the ſame with the conſequent of the ratio that went immediately before, their addition is beſt performed by throwing out all the intermediate terms: thus the ratios of A to B, of B to C, and of C to D, when added together, make up the ratio of A to D, as was ſhewn in the 293d article.

Therefore, if the ratios to be added be diſcontinued, it will be proper to continue them from ſome given antecedent, ſuppoſe from unity, before they can be added, thus: let the ratio of A to B, the ratio of C to D, and the ratio of E to F, be propoſed to be added into one ſum: now the ratio of A to B ſet off from 1 reaches to $\frac{B}{A}$ becauſe A is to B as 1 to $\frac{B}{A}$; the next ratio of C to D ſet off from $\frac{B}{A}$ reaches to $\frac{BD}{AC}$; and the laſt ratio of E to F ſet off from $\frac{BD}{AC}$ reaches to $\frac{BDF}{ACE}$; therefore the ratios of A to B, of C to D, and of E to F, when added together, make the ratio

of 1 to $\frac{BDF}{ACE}$, which is the ſame with the ratio of *ACE* to *BDF*; whence we have the following canon:

Multiply firſt the antecedents of all the ratios propoſed together, and then their conſequents, and the ratio of the products thence ariſing will be the ſum of the ratios propoſed.

That the ratio of *A* to *B*, of *C* to *D*, and of *E* to *F*, all together conſtitute the ratio of *ACE* to *BDF*, may be further confirmed by ſetting them off from *ACE* and from one another thus: the ratio of *A* to *B* ſet off from *ACE* reaches to *BCE*; in the next place the ratio of *C* to *D* ſet off from *BCE* reaches to *BDE*; and laſtly the ratio of *E* to *F* ſet off from *BDE* reaches to *BDF*; therefore all theſe ratios together conſtitute the ratio of *ACE* to *BDF*. An example in numbers take as follows: let it be required to add theſe four ratios together, *viz.* the ratio of 2 to 3, the ratio of 4 to 5, the ratio of 6 to 7, and the ratio of 8 to 9. Here the product of the antecedents is $2\times4\times6\times8=384$, and the product of the conſequents is $3\times5\times7\times9=945$; therefore the ſum of all the ratios propoſed is the ratio of 384 to 945; and the proof is eaſy: for the ratio of 2 to 3 reaches from 384 to 576; the ratio of 4 to 5 reaches from 576 to 720; the ratio of 6 to 7 reaches from 720 to 840; and the ratio of 8 to 9 reaches from 840 to 945; therefore the ratios of 2 to 3, of 4 to 5, of 6 to 7, and of 8 to 9, reach from 384 to 945.

From what has here been ſaid concerning the addition of ratios, may eaſily be underſtood an expreſſion ſo frequent among Mechanical and Philoſophical writers; as when they ſay that *A* is to *B* in a ratio compounded of the ratio of *C* to *D*, and of the ratio of *E* to *F*; whereby they mean no more than that the ratio of *A* to *B* is equal to the ſum of the ratios of *C* to *D*, and of *E* to *F*; or that *A* is to *B* as *CE* to *DF*.

According to the Mathematicians, every ratio is either a *ratio majoris inæqualitis*, or a *ratio æqualitatis*,

tatis, or a *ratio minoris inæqualitatis*, which takes in all ſort of ratios: for by a *ratio majoris inæqualitatis* they mean the ratio that any greater quantity hath to a leſs; by a *ratio minoris inæqualitatis* they mean the contrary, that is, the ratio of a leſſer quantity to a greater; and therefore by a *ratio æqualitatis* they mean the ratio (if it may be called ſo) that every quantity hath to its equal. If we diſtinguiſh ratios according to the effects they have in compoſition, then every *ratio majoris inæqualitatis* ought to be looked upon as affirmative, becauſe ſuch ratios always increaſe thoſe to which they are added; on the other hand, the *rationes minoris inæqualitatis* ought to be conſidered as negative, becauſe theſe always diminiſh the ratios to which they are added; therefore the *ratio æqualitatis* ought to be looked upon as having no magnitude at all, becauſe ſuch ratios have no effect in compoſition. Thus if to the ratio of 5 to 3 be added the ratio of 3 to 2, the ſum will be the ratio of 5 to 2, as above; but the ratio of 5 to 2 is greater than the ratio of 5 to 3; therefore the ratio of 3 to 2 ought to be looked upon as affirmative, becauſe it increaſes the ratio to which it is added: on the other hand, if to the ratio of 5 to 3 be added the ratio of 3 to 4, the ſum will be the ratio of 5 to 4, which is leſs than the ratio of 5 to 3, and therefore the ratio of 3 to 4 is negative: laſtly, if to the ratio of 5 to 3 be added the ratio of 3 to 3, the ſum will ſtill be the ratio of 5 to 3; therefore the ratio of 3 to 3 is nothing.

Whenever a ratio is to be reſolved into two others by any arbitrary interpoſition of an intermediate term, it may be thought however that this intermediate term ſhould be ſome intermediate magnitude between the terms of the ratio to be reſolved; and ſo we ſuppoſed it in the 293d article: but that reſtriction was only ſuppoſed to prevent unſeaſonable objections that might otherwiſe ariſe about it; for there is no neceſſity that the intermediate term ſhould be of an intermediate magni-

magnitude betwixt the extremes, if we allow of negative ratios; for the ratio of 5 to 4 (for inſtance) may be reſolved into the two ratios of 5 to 3 and of 3 to 4, though the intermediate term 3 be out of the limits of 5 and 4. This I ſay is plain; for though the ratio of 5 to 3, which is one of the parts, be greater than the ratio of 5 to 4, yet the ratio of 3 to 4, which is the other part, is negative, and qualifies the other in the compoſition, ſo as to reduce it to the ratio of 5 to 4: ſo 9 may be looked upon as a part of 7, provided the other part be —2.

Corollary.

If there be a ſeries of quantities A, B, C, D, *whereof* A *is to* B *as* R *to* r, *and* B *is to* C *as* S *to* s, *and* C *is to* D *as* T *to* t; *I ſay then that* A *will be to* D *as* RST, *the product of all the antecedents, to* r s t *the product of all the conſequents.* For by the art. 293, the ratio of *A* to *D* is compounded of the ratios of *R* to *r*, of *S* to *s*, and of *T* to *t*; and theſe ratios, when thrown into one ſum, conſtitute the ratio of *RST* to *rst*; therefore *A* is to *D* as *RST* to *rst*.

Of the ſubtraction of ratios.

296. *The ſubtraction of ratios one from another, when both have the ſame antecedent, or both the ſame conſequent, is obvious enough: thus the ratio of* A *to* B *ſubtracted from the ratio of* A *to* C *leaves the ratio of* B *to* C; *and the ratio of* B *to* C *ſubtracted from the ratio of* A *to* C *leaves the ratio of* A *to* B: this I ſay is obvious, becauſe (according to art. 293) the ratio of *A* to *C* contains the ratios of *A* to *B* and of *B* to *C*; and therefore, if either part be taken away, there muſt remain the other.

But if the two ratios, whereof one is to be ſubtracted from the other, have neither the ſame antecedent nor the ſame conſequent, it will be proper then to reduce them to the ſame antecedent, by ſetting off the ratio

to

to be ſubtracted from the antecedent of the other, thus: let it be required to ſubtract the ratio of C to D from the ratio of A to B: now the ratio of C to D ſet off from A reaches to $\frac{AD}{C}$; therefore to ſubtract the ratio of C to D from the ratio of A to B is the ſame as to ſubtract the ratio of A to $\frac{AD}{C}$ from the ratio of A to B; but the ratio of A to $\frac{AD}{C}$ ſubtracted from the ratio of A to B, a ratio of the ſame antecedent, leaves the ratio of $\frac{AD}{C}$ to B, or of AD to BC; therefore the ratio of C to D ſubtracted from the ratio of A to B leaves the ratio of AD to BC. The rule then is as follows:

Whenever one ratio is to be ſubtracted from another, change the ſign of the ratio to be ſubtracted by inverting its terms, and then the ſum of this new ratio added to the other will be the ſame with the remainder of the intended ſubtraction. Thus to ſubtract the ratio of C to D from the ratio of A to B is the ſame as to add the ratio of D to C to the ratio of A to B; but the ratio of D to C added to the ratio of A to B gives the ratio of AD to BC by the laſt article; therefore the ratio of C to D ſubtracted from the ratio of A to B leaves the ratio of AD to BC. For a further proof of this, we are to take notice, that in all ſubtraction whatever, the remainder and the quantity ſubtracted ought both together to make the quantity from whence the ſubtraction was made; but in our caſe the remainder was the ratio of AD to BC, and the quantity ſubtracted was the ratio of C to D, and theſe two added together make the ratio of ACD to BCD, or of A to B, which is the ratio from whence the ſubtraction was made; therefore the remainner in this caſe was rightly aſſigned.

For

For an example in numbers, let it be required to ſubtract the ratio of 4 to 5 from the ratio of 2 to 3: now the ratio of 5 to 4 added to the ratio of 2 to 3 gives the ratio of 10 to 12, or of 5 to 6, by the laſt article; therefore the ratio of 4 to 5 ſubtracted from the ratio of 2 to 3 leaves the ratio of 5 to 6, which may be confirmed thus: the ratio of 2 to 3 is the ſame with the ratio of 4 to 6, which contains the ratios of 4 to 5 and of 5 to 6; therefore, if the ratio of 4 to 5 be taken away, there will remain the other part, which is the ratio of 5 to 6.

Before I conclude this article, I ought to take notice that there is another way of conceiving the ſubtraction of ratios, which for its uſe in Phyſics and Mechanics ought not to be paſſed by in this place; it is thus: the ratio of C to D added to the ratio of A to B conſtitutes the ratio of AC to BD; therefore, *e converſo*, the ratio of C to D ſubtracted from the ratio of A to B muſt leave the ratio of $\frac{A}{C}$ to $\frac{B}{D}$, becauſe multiplication and diviſion are as much the reverſe of one another as addition and ſubtraction; but this ratio of $\frac{A}{C}$ to $\frac{B}{D}$, when reduced to integral terms, is the ſame with the ratio of AD to BC found before.

N. B. *Wherever it is ſaid that the ratio of* A *to* B *is compounded of the direct ratio of* C *to* D, *and of the inverſe or reciprocal ratio of* E *to* F, *the meaning is, that the ratio of* A *to* B *is equal to the exceſs of the ratio of* C *to* D *above the ratio of* E *to* F, *or that* A *is to* B *as* $\frac{C}{E}$ *to* $\frac{D}{F}$, *or as* CF *to* DE.

Of the multiplication and diviſion of ratios.

297. If the ratio of A to B be added to itſelf, that is, to the ratio of A to B, the ſum will be the ratio of A^2 to B^2 by the laſt article but one; and this

being added again to the ratio of A to B gives the ratio of A^1 to B^1, and ſo on; therefore the ratio of A^2 to B^2 is double, and the ratio of A^3 to B^3 triple, of the ratio of A to B. And univerſally, *The ratio of* A^n *to* B^n *is ſuch a multiple of the ratio of* A *to* B *as is expreſſed by the number* n. Thus the ratio of A^4 to B^4 is four times the ratio of A to B, which I prove thus: the ratio of A to B reaches firſt from A^4 to A^3B, 2dly, from A^3B to A^2B^2, 3dly, from A^2B^2 to AB^3, and 4thly, from AB^3 to B^4.

To give an example in numbers, I ſay that five times the ratio of 2 to 3 is the ratio of the fifth power of 2 to the fifth power of 3, that is, the ratio of 32 to 243: for the ratio of 2 to 3 reaches 1ſt from 32 to 48, 2dly from 48 to 72, 3dly from 72 to 108, 4thly from 108 to 162, and 5thly from 162 to 243. Thus much for multiplication.

Diviſion is the reverſe of multiplication; and therefore as every ratio is doubled or trebled or quadrupled by ſquaring or cubing or ſquare ſquaring its terms, ſo every ratio is biſected or triſected or quadriſected by extracting the ſquare or cube or ſquare-ſquare roots of its terms. Thus half the ratio of 2 to 3 is the ratio of the ſquare root of 2 to the ſquare root of 3, that is (when reduced according to the firſt ſcholium in art. 179*) the ratio of 40 to 49 nearly; which is further proved thus: the ratio of 40 to 49 is half the ratio of 1600 to 2401, by what was delivered in the former part of this article; but 1600 is to 2400 as 2 to 3; therefore 1600 is to 2401 as 2 to 3 very near.

But there is no neceſſity of a double extraction of the root in the diviſion of a ratio, provided the ratio propoſed be reduced to an equal one whoſe antecedent is unity. Thus 2 is to 3 as 1 to $\frac{3}{2}$, and therefore half the ratio of 2 to 3 is the ratio of 1 to $\sqrt{\frac{3}{2}}$, or the ratio of 1 to $\sqrt{1.5}$.

From what has been ſaid it appears that one ratio may be commenſurate to another, and yet the terms of one incommenſurate to the terms of the other: thus the

* See the Quarto Edition, p. 283.

ratio

ratio of 2 to 3 is certainly commenſurate to the ratio of the ſquare root of 2 to the ſquare root of 3, the former being double of the latter; and yet 2 and 3, the terms of the former ratio are incommenſurate to $\sqrt{2}$ and $\sqrt{3}$ the terms of the latter.

Note. *Wherever it is ſaid that* A *is to* B *in a ſeſquiplicate ratio of* C *to* D, *the meaning is, that the ratio of* A *to* B *is equal to* $\frac{3}{2}$ *of the ratio of* C *to* D: therefore, in ſuch a caſe, twice the ratio of A to B will be equal to three times the ratio of C to D; but twice the ratio of A to B is the ratio of A^2 to B^2, and three times the ratio of C to D is the ratio of C^3 to D^3; therefore if A be to B in a ſeſquiplicate ratio of C to D, A^2 will be to B^2 as C^3 to D^3. Thus, in the revolutions of the primary planets about the Sun, and of the ſecondary planets about Jupiter and Saturn, their periodic times are ſaid to be in a ſeſquiplicate ratio of their middle diſtances, that is, the ſquares of their periodic times are as the cubes of their middle diſtances.

Another way of multiplying and dividing ſmall ratios, that is, whoſe terms are large in compariſon of their difference.

298. Before I deliver what I have to ſay upon this head, I ſhall only obſerve, that *If two intermediate quantities have always the ſame difference, the greater the quantities are, the nearer will their ratio approach towards a ratio of equality:* thus the difference betwixt 2 and 1 is the ſame with the difference betwixt 100 and 99; but the ratio of 2 to 1 or of 100 to 50 is much greater than the ratio of 100 to 99. By the help of this obſervation, and the following theorem, I ſhall endeavour to ſhew that ſmall ratios may ſometimes be doubled, or tripled, or biſected, or triſected, by more compendious ways than thoſe that are taught in the laſt article; and whenever they happen

to be ſo, they ought to be uſed, and frequently are uſed, rather than the other.

A THEOREM.

If there be two quantities whoſe difference is but ſmall in compariſon of the quantities themſelves, and if ſo much be added to one and ſubtracted from the other as ſhall make their difference double, or triple, or half, or a third part of what it was before; I ſay then that the quantities after this alteration ſhall be in a duplicate, or a triplicate, or a ſubduplicate, or a ſubtriplicate ratio of that they were in before any ſuch change was made, nearly.

1ſt, Let there be two numbers 10 and 11, whoſe difference is 1; then if $\frac{1}{2}$ be added to 11 and ſubtracted from 10, we ſhall have the numbers $11\frac{1}{2}$ and $9\frac{1}{2}$, whoſe difference is 2: I ſay now that $11\frac{1}{2}$ is to $9\frac{1}{2}$ in a duplicate ratio of 11 to 10 nearly. For the ratio of $11\frac{1}{2}$ to $9\frac{1}{2}$ is reſolvable into theſe two ratios, *viz.* the ratio of $11\frac{1}{2}$ to $10\frac{1}{2}$ and the ratio of $10\frac{1}{2}$ to $9\frac{1}{2}$: now of theſe two ratios the former, to wit, that of $11\frac{1}{2}$ to $10\frac{1}{2}$, is ſomewhat leſs than the ratio of 11 to 10, by the obſervation at the beginning of this article; and the latter, to wit, that of $10\frac{1}{2}$ to $9\frac{1}{2}$, is ſomewhat greater than the ratio of 11 to 10, and the exceſs in this caſe is nearly equal to the defect in the former; therefore the ſum of both theſe ratios put together, that is, the ratio of $11\frac{1}{2}$ to $9\frac{1}{2}$ will be very nearly equal to twice the ratio of 11 to 10.

2dly, As the difference betwixt 10 and 11 is 1, add 1 to 11 and ſubtract it from 10, and you will have the numbers 12 and 9, whoſe difference is 3: I ſay now that 12 will be to 9, or 4 to 3, in a triplicate ratio of 11 to 10 nearly. For the ratio of 12 to 9 is reſolvable into theſe three ratios, to wit, the ratio of 12 to 11, the ratio of 11 to 10, and the ratio of 10 to 9; and of theſe three ratios, the firſt, to wit, that of 12 to 11, is ſomewhat leſs than the middle ratio of 11 to 10; and the laſt, to wit, that of 10 to 9, is about as much greater;

greater; therefore the firſt and laſt ratios put together will make about twice the middle ratio of 11 to 10; therefore all theſe three ratios put together, to wit, the ratio of 12 to 9, will make three times the ratio of 11 to 10 nearly.

3dly, And if increaſing the difference increaſes the ratio proportionably, then diminiſhing the difference ought to diminiſh the ratio proportionably, that is, if the difference be reduced to half, or a third part of what it was at firſt, the ratio ought to be ſo reduced: now as the difference between 10 and 11 is 1, add $\frac{1}{4}$ to 10 and ſubtract it from 11, and you will have the numbers $10\frac{1}{4}$ and $10\frac{3}{4}$, whoſe difference is $\frac{1}{2}$, and $10\frac{1}{4}$ will be to $10\frac{3}{4}$ in a ſubduplicate ratio of 10 to 11 nearly; but if $\frac{1}{3}$ be added to 10 and ſubtracted from 11, you will then have the numbers $10\frac{1}{3}$ and $10\frac{2}{3}$, whoſe difference is $\frac{1}{3}$; and $10\frac{1}{3}$ will be to $10\frac{2}{3}$ in a ſubtriplicate ratio of 10 to 11 nearly.

Let us now try how near the ratios here found approach to the truth. By the laſt article, the duplicate ratio of 10 to 11 is the ratio of 100 to 121, or of 1 to 1.2100; and according to the foregoing theorem it is the ratio of $9\frac{1}{2}$ to $11\frac{1}{2}$, or of 19 to 23, or of 1 to 1.2105.

By the laſt article the triplicate ratio of 10 to 11 is the ratio of 1000 to 1331, or of 1 to 1.331; and according to the foregoing theorem it is the ratio of 9 to 12, or of three to 4, or of 1 to 1.333.

By the laſt article the ſubduplicate ratio of 10 to 11 is the ratio of 1 to the ſquare root of $\frac{1}{110}$, or of 1 to 1.04881; and according to the foregoing theorem it is the ratio of $10\frac{1}{4}$ to $10\frac{3}{4}$, or of 41 to 43, or of 1 to 1.04878.

By the laſt article the ſubtriplicate ratio of 10 to 11 is the ratio of 1 to the cube root of $\frac{1}{110}$, that is, of 1 to 1.03228; and according to the foregoing theorem it is the ratio of $10\frac{1}{3}$ to $10\frac{2}{3}$, or of 31 to 32, or of 1 to 1.03226.

By theſe inſtances we ſee how near theſe ratios come up to the truth, even when the difference is no leſs than a tenth or an eleventh part of the whole: but if we ſuppoſe the difference to be the hundredth or the thouſandth part of the whole, they will be much more accurate; inſomuch that, to multiply or divide the ratio, it will be ſufficient to encreaſe or diminiſh one of the numbers only. Thus 100 is to 102 in a duplicate, and to 103 in a triplicate, ratio of 100 to 101; and 100 is to $100+\frac{1}{2}$ in a ſubduplicate, and to $100+\frac{1}{3}$ in a ſubtriplicate, ratio of 100 to 101 nearly: and univerſally, *If* $A+z$ *and* $A+y$ *be any two quantities approaching infinitely near to the quantity* A, *the ratio of* $A+z$ *to* A *will be to the ratio of* $A+y$ *to* A *as the infinitely ſmall difference* z *is to the infinitely ſmall difference* y.

I ſhall draw only one example out of an infinite number that might be produced to ſhew the uſe of the foregoing propoſition. Suppoſe then I have a clock that gains one minute every day; how much muſt I lengthen the pendulum to ſet it right? Let l be the preſent length of the pendulum, let x be the increment to be added to its length in order to correct its motion, and let n be the number of minutes in one day; then it is plain that the pendulum l performs the ſame number of vibrations in the time $n-1$ that the pendulum $l+x$ is to perform in the time n. Now Monſieur *Huygens* has demonſtrated that the times wherein different pendulums perform the ſame number of vibrations are in a ſubduplicate ratio of the lengths of thoſe pedulums; therefore $n-1$ muſt be to n in a ſubduplicate ratio of l to $l+x$, or (which comes to the ſame thing) l muſt be to $l+x$ in a duplicate ratio of $n-1$ to n: but by the foregoing propoſition, the duplicate ratio of $n-1$ to n is the ratio of $n-\frac{3}{2}$ to $n+\frac{1}{2}$, or of $2n-3$ to $2n+1$; therefore l is to $l+x$ as $2n-3$ is to $2n+1$, that is, the pendulum muſt be lengthened in the proportion of $2n-3$ to $2n+1$; but n the number of minutes in one day

is 1440; and therefore $2n-3$ is to $2n+1$ as 2877 is to 2881, or as 719 to 720 very near; therefore the pendulum muſt be lengthened in the proportion of 719 to 720. *Q. E. I.*

Had the duplicate ratio of $n-1$ to n been taken only by diminiſhing $n-1$ to $n-2$, without meddling with the other number n, the concluſion would ſtill have been the ſame; for then l would have been to $l+x$ as $n-2$ to n, as 1438 to 1440, as 719 to 720.

Having now delivered what I intended concerning the compoſition and reſolution of ratios, it remains that I ſay ſomething further concerning the application of this doctrine, and then I ſhall make an end of the ſubject.

Definition 4.

299. *If two variable quantities* Q *and* R *be of ſuch a nature, that* R *cannot be increaſed or diminiſhed in any proportion, but* Q *muſt neceſſarily be increaſed or diminiſhed in the ſame proportion; as if* R *cannot be changed to any other value* r, *but* Q *muſt alſo be changed to ſome other value* q, *and ſo changed that* Q *ſhall always be to* q *in the ſame proportion as* R *to* r; *then is* Q *ſaid to be as* R *directly, or ſimply as* R. Thus is the circumference of a circle ſaid to be as the diameter; becauſe the diameter cannot be increaſed or diminiſhed in any proportion, but the circumference muſt neceſſarily be increaſed or diminiſhed in the ſame proportion. Thus is the weight of a body ſaid to be as the quantity of matter it contains, or proportionable to the quantity of matter; becauſe the quantity of matter cannot be increaſed or diminiſhed in any proportion, but the weight muſt be increaſed or diminiſhed in the ſame proportion.

Corollary 1.

If Q *be as* R *directly, then* e converſo R *muſt neceſſarily be as* Q *directly.* For let Q be changed to

any other value q, and at the ſame time let R be changed to r; then ſince $\mathcal{Q}$ is as R, $\mathcal{Q}$ will be to q as R to r; but if $\mathcal{Q}$ is to q as R is to r, then *vice verſa* R will be to r as $\mathcal{Q}$ to q: ſince then $\mathcal{Q}$ cannot be changed to q, but R muſt be changed to r, and that in the ſame proportion, it follows by this definition that R is as $\mathcal{Q}$ directly.

COROLLARY 2.

If Q *be directly as* R, *and* R *be directly as* S, *then will* Q *be directly as* S. For let S be changed to s, and at the ſame time R to r, and $\mathcal{Q}$ to q; then ſince by the ſuppoſition R is as S, R muſt be to r as S to s; and ſince again $\mathcal{Q}$ is as R, $\mathcal{Q}$ will be to q as R to r: ſince then $\mathcal{Q}$ is to q as R to r, and R is to r as S to s, it follows that $\mathcal{Q}$ will be to q as S to s, and conſequently that $\mathcal{Q}$ will be as S.

COROLLARY 3.

If Q *be as* R, *and* R *be as* S; *I ſay then that* Q *will be as* $R \pm S$, *and alſo as the ſquare root of the product* RS. For changing $\mathcal{Q}$, R, S, into q, r, s, ſince R is as S, we ſhall have R to r as S to s; whence by the twelfth and nineteenth of the fifth book of the Elements R will be to r as $R \pm S$ is to $r \pm s$; but $\mathcal{Q}$ is to q as R is to r, *ex hypotheſi*; therefore $\mathcal{Q}$ is to q as $R \pm S$ is to $r \pm s$; therefore by this definition $\mathcal{Q}$ will be as $R \pm S$. Again, ſince R is as S, R^2 will be as RS, and R as $\sqrt{RS}$; but $\mathcal{Q}$ is as R; therefore by the laſt corollary $\mathcal{Q}$ will be as $\sqrt{RS}$.

COROLLARY 4.

If any variable quantity as Q *be multiplied by any given number as* 5; *I ſay then that* 5Q *will be as* Q. For it will be impoſſible for $\mathcal{Q}$ to be increaſed or diminiſhed in any proportion, but $5\mathcal{Q}$ muſt be increaſed or diminiſhed in the ſame proportion; if $\mathcal{Q}$ in any one caſe be double of $\mathcal{Q}$ in another, then $5\mathcal{Q}$ in the

the former caſe muſt be double of 5Q in the latter, and ſo on; therefore 5Q is as Q.

COROLLARY 5.

If Q *be as* R, *then* Q^2 *will be as* R^2, Q^3 *as* R^3, $\sqrt{Q}$ *as* $\sqrt{R}$, &c. For let R^2 be changed in the proportion of D to E; then will R be changed in the proportion of $\sqrt{D}$ to $\sqrt{E}$; but Q is as R; therefore Q will alſo be changed in the proportion of $\sqrt{D}$ to $\sqrt{E}$; therefore Q^2 will be changed in the proportion of D to E: ſince then R^2 cannot be changed in any proportion, ſuppoſe of D to E, but Q^2 muſt neceſſarily be changed in the ſame proportion, it follows from this definition that Q^2 is as R^2: and the reaſoning is the ſame in all other caſes.

COROLLARY 6.

If Q, R, *and* S, *be three variable quantities, and* Q *be as the product or rectangle* RS; *I ſay then, that* $\frac{Q}{R}$ *will always be as* S, *and* $\frac{Q}{S}$ *as* R, *and that* $\frac{Q}{RS}$ *will be a given quantity, or (which is chiefly meant by that phraſe) that the quantity* $\frac{Q}{RS}$ *will always be the ſame, be the values of* Q, R, *and* S, *what they will.* For ſince Q is as RS, Q cannot be increaſed or diminiſhed in any proportion, but RS muſt be increaſed or diminiſhed in the ſame proportion; therefore $\frac{Q}{R}$ cannot be increaſed or diminiſhed in any proportion, but $\frac{RS}{R}$ or S muſt be increaſed or diminiſhed in the ſame proportion; therefore S is as $\frac{Q}{R}$, and $\frac{Q}{R}$ as S: and by a like proof, R will be as $\frac{Q}{S}$, and $\frac{Q}{S}$ will be as R: but if $\frac{Q}{S}$ be as R, then

then dividing both ſides by *R*, we ſhall have $\frac{Q}{RS}$ as 1; but 1 is a quantity that neither increaſes nor diminiſhes, but is always the ſame; therefore the quantity $\frac{Q}{RS}$ will always be the ſame: and for the ſame reaſon, *If* Q *be as any ſingle quantity, ſuppoſe* R, $\frac{Q}{R}$ *will always be the ſame, let* Q *and* R *be what they will.*

COROLLARY 7.

If there be four variable quantities A, B, C, D, *all in numbers, whereof* A *is as* B, *and* C *is as* D; *I ſay then that the product* AC *will be as the product* BD. For ſince *A* is as *B*, *AC* will be as *BC*, and ſince *C* is as *D*, *BC* will be as *BD*; therefore by the ſecond corollary *AC* will be as *BD*; that is, *AC* in one caſe will be to *AC* in any other as *BD* in the former caſe is to *BD* in the latter.

DEFINITION 5.

390. *If two variable quantities* Q *and* R *be of ſuch a nature, that* R *cannot be increaſed in any proportion whatever, but* Q *muſt neceſſarily be diminiſhed in a contrary proportion, or that* R *cannot be diminiſhed in any proportion whatever, but* Q *muſt neceſſarily be increaſed in a contrary proportion; in a word, if* R *cannot be changed in a proportion of* D *to* E, *but* Q *muſt neceſſarily be changed in the proportion of* E *to* D; *then is* Q *ſaid to be as* R *inverſely or reciprocally.* Thus if a ſpherical body be viewed at any conſiderable diſtance, the apparent diameter is ſaid to be reciprocally as the diſtance, becauſe the greater the diſtance is, the leſs will be the apparent diameter, and *vice verſa*. Thus if a globe be ſuppoſed to move uniformly about its *axis*, the periodical time of this motion is ſaid to be reciprocally as the velocity with which the globe circulates (for the quicker the circulation

culation is, the ſooner it will be over); which is as much as to ſay, that the greater the velocity is with which the globe circulates, the leſs will be the periodical time of one revolution, and *vice verſa*. Thus if the numerator of a fraction continues always the ſame whilſt the denominator is ſuppoſed to vary, that fraction is ſaid to be reciprocally as its denominator, becauſe the greater the denominator is, the leſs will be the value of the fraction, and *vice verſa*.

Corollary 1.

If Q *be reciprocally as* R, *then* e converſo R *will be reciprocally as* Q. For let Q be changed in the proportion of D to E, and at the ſame time let R be changed in the proportion of A to B; then ſince Q is reciprocally as R, Q muſt be changed in the proportion of B to A; but Q was changed in the proportion of D to E; therefore B muſt be to A as D to E; therefore, inverſely, A muſt be to B as E to D; but R was changed in the proportion of A to B by the ſuppoſition; therefore R was changed in the proportion of E to D. Since then Q cannot be changed in any proportion, ſuppoſe of D to E, but R muſt neceſſarily be changed in the contrary proportion of E to D, it follows from this definition that R muſt be reciprocally as Q.

Corollary 2.

If Q *be directly as* R, *and* R *be reciprocally as* S, *then* Q *muſt be reciprocally as* S. For let S be changed in the proportion of D to E; then ſince R is reciprocally as S, R muſt be changed in the proportion of E to D; but Q is directly as R by the ſuppoſition; therefore Q muſt alſo be changed in the proportion of E to D. Since then S cannot be changed in the proportion of D to E, but Q muſt neceſſarily be changed in the proportion of E to D, it follows from this definition that Q is reciprocally as S.

Corol-

COROLLARY 3.

By a like way of reaſoning, if Q *be reciprocally as* R, *and* R *be reciprocally as* S, Q *will be directly as* S.

COROLLARY 4.

If two variable quantities Q *and* R *be of ſuch a nature that their product or rectangle* QR *is always the ſame; I ſay then that* Q *will be reciprocally as* R. For ſince QR is always the ſame, it will be as the number 1, which neither increaſes nor diminiſhes; but if QR be as one, then Q will be as the fraction $\frac{1}{R}$ by the ſixth corollary to the fourth definition. Since then Q is directly as the fraction $\frac{1}{R}$, and the fraction $\frac{1}{R}$ is reciprocally as its denominator R by this definition, it follows from the ſecond corollary that Q will be reciprocally as R.

COROLLARY 5.

Every fraction is reciprocally as the ſame fraction inverted. Thus the fraction $\frac{R}{S}$ is reciproeally as the fraction $\frac{S}{R}$. This is evident from the laſt corollary; for if the fractions $\frac{R}{S}$ and $\frac{S}{R}$ be multiplied together, their product will always be unity, let R and S be what they will.

COROLLARY 6.

If Q *be reciprocally as* R, *or reciprocally as* $\frac{R}{1}$

then

then Q *will be directly as* $\frac{I}{R}$. For ſince Q is reciprocally as $\frac{R}{I}$, and $\frac{R}{I}$ is reciprocally as $\frac{I}{R}$ by the laſt corollary, it follows from the third corollary that Q will be directly as $\frac{I}{R}$. For the ſame reaſon, *If* Q *be reciprocally as* $\frac{I}{R}$, *it will be directly as* R.

Definition 6.

301. *If any quantity as* Q *depends upon ſeveral others as* R, S, T, V, X, *all independent of one another, ſo that any one of them may be changed ſingly without affecting the reſt; and if none of the quantities* R, S, T, *can be changed ſingly, but* Q *muſt be changed in the ſame proportion, nor any of the quantities* V, X, *but* Q *muſt be changed in a contrary proportion; then is* Q *ſaid to be as* R *and* S *and* T *directly, and as* V *and* X *reciprocally or inverſely*. Thus the fraction $\frac{RST}{VX}$ is ſaid to be as *R* and *S* and *T* directly, and as *V* and *X* inverſely, becauſe none of the factors belonging to the numerator can be changed, but the value of the fraction muſt be changed in the ſame proportion, and none of the factors belonging to the denominator can be changed, but the value of the fraction muſt be changed in a contrary proportion.

N. B. *If* Q *be as* R *and* S *and* T *directly, without any reciprocals, then it is ſaid to be as* R *and* S *and* T conjunctim, *jointly*.

A Theorem.

302. *If* Q *be as* R *and* S *and* T *directly, and as* V *and* X *reciprocally; and if the quantities* R, S, T, V, X, *be changed into* r, s, t, v, x, *and ſo* Q *into* q; *I ſay then that the ratio of* Q *to* q *will be equal to the exceſs*

exceſs of all the direct ratios taken together above all the reciprocal ones taken together: as if the ratios of R *to* r, *of* S *to* s, *and of* T *to* t *(which I call direct ratios) when added together make the ratio of* A *to* B; *and if the ratios of* V *to* v, *and of* X *to* x *(which I call reciprocal ratios) when added together make the ratio of* C *to* D; *I ſay then that the ratio of* Q *to* q *will be equal to the exceſs of the ratio of* A *to* B *above the ratio of* C *to* D.

For ſuppoſing all but R to continue the ſame, let R be changed into r; then will $\mathcal{Q}$ be changed from its firſt value in the ratio of R to r by the *hypotheſis*: let now r, T, V, X continue, and let S be changed into s: then will $\mathcal{Q}$ be changed from its laſt value in the ratio of S to s: in like manner if T be changed into t, *cæteris paribus*, $\mathcal{Q}$ will be changed from its laſt value in the ratio of T to t: therefore if R, S, T be changed into r, s, t, $\mathcal{Q}$ will be changed from one value to another in a ratio compounded of all the direct ratios of R to r, of S to s, and of T to t; that is, $\mathcal{Q}$ will be changed in the ratio of A to B. This being ſo, let us now imagine V to be changed, *cæteris paribus*, into v; then will $\mathcal{Q}$ be further changed in the ratio of v to V; and if after this we imagine X to be changed into x, $\mathcal{Q}$ will be changed in the proportion of x to X, and will now be arrived at its laſt value q: therefore if to the ratio of A to B you add the ratios of v to V and of x to X, you will have the ratio of $\mathcal{Q}$ to q: but to add the ratio of v to V is the ſame thing as to ſubtract the ratio of V to v by art. 296; and ſo again, to add the ratio of x to X is the ſame as to ſubtract the ratio of X to x; therefore if from the ratio of A to B you ſubtract the ratios of V to v and of X to x, you will have the ratio of $\mathcal{Q}$ to q; but the ratios of V to v and of X to x, when added together, make the ratio of C to D, *ex hypotheſi*; therefore if from the ratio of A to B you ſubtract the ratio of C to D, there will remain the ratio of $\mathcal{Q}$ to q; therefore the ratio of

$\mathcal{Q}$ to

$\mathfrak{Q}$ to q is the exceſs of the ratio of A to B above the ratio of C to D; or (which is the ſame thing) $\mathfrak{Q}$ is to q in a ratio compounded of the ratio of A to B directly, and of the ratio of C to D inverſely. See art. 296.

This is upon a ſuppoſition that the quantities R, S, T, V, X were changed into r, s, t, v, x one after another in time: but ſince the ratio of $\mathfrak{Q}$ to q does not depend upon the intervals of time between the ſeveral changes, but will be the ſame whether thoſe intervals be greater or leſs, it follows that the ratio of $\mathfrak{Q}$ to q will be the ſame as if all theſe changes had been made at once. $\mathfrak{Q}$. *E. D.*

Corollary 1.

If the quantities R, S, T, V, X, and conſequently A, B, C, D, be expreſſed by numbers, as they muſt be before they can be of uſe in any computation; then the ratio of A to B will be the ratio of RST to rst, and the ratio of C to D will be the ratio of VX to vx; and the exceſs of the ratio of A to B above the ratio of C to D will be the ratio of $\frac{RST}{VX}$ to $\frac{rst}{vx}$; (ſee the ſecond way of ſubtracting ratios in art. 296) therefore, in this caſe, $\mathfrak{Q}$ will be to q as the fraction $\frac{RST}{VX}$ is to the fraction $\frac{rst}{vx}$. *Since then the fraction* $\frac{\mathrm{RST}}{\mathrm{VX}}$ *cannot be changed into* $\frac{\mathrm{rst}}{\mathrm{vx}}$ *but at the ſame time* $\mathfrak{Q}$ *muſt be changed into* q, *and ſo changed that* $\mathfrak{Q}$ *will be to* q *as* $\frac{\mathrm{RST}}{\mathrm{VX}}$ *is to* $\frac{\mathrm{rst}}{\mathrm{vx}}$, *it follows from the fourth definition that* $\mathfrak{Q}$ *will be as the fraction* $\frac{\mathrm{RST}}{\mathrm{VX}}$; *and conſequently that* $\mathfrak{Q}$ *in any one caſe will be to* $\mathfrak{Q}$ *in any other as the fraction* $\frac{\mathrm{RST}}{\mathrm{VX}}$

in the former caſe is to the fraction $\frac{RST}{VX}$ *in the latter.*

COROLLARY 2.

If there be no reciprocals then Q *will be as the product of all the direct terms, that is, as the product* RS *if there be two of them, or as the product* RST *if there be three of them,* &c.

SCHOLIUM.

In the demonſtration of the foregoing propoſition as well as in the ſixth definition it was ſuppoſed, that the quantities *R*, *S*, *T*, *V*, *X*, upon which *Q* depended, were themſelves entirely independent of one another, ſo as that any of them might be changed ſingly without affecting the reſt; and in ſuch a caſe, if *Q* be as *R* and *S* directly, it may be concluded to be as the product *RS*. But this concluſion muſt not be carried farther than can be juſtified by the demonſtration: for if in any caſe the quantities *R* and *S* ſhould not be independent, if neither of them can be changed whilſt the other continues the ſame, then though no change can be made either in *R* or *S* but what will make a proportionable change in *Q*, yet here *Q* muſt not be ſaid to be as the product *RS*. As for example, let *Q* be an arc of a circle ſubtending at the diſtance *R* an angle whoſe quantity is repreſented by *S*; then it is plain that neither *R* nor *S* can be changed ſingly, but *Q* muſt be changed proportionably; it is plain alſo that either *R* or *S* may be changed ſingly whilſt the other remains the ſame; and therefore in this caſe it is lawful to conclude that *Q* is as the product *RS*. But let us now ſuppoſe *Q* to be the circumference of a circle whoſe *radius* is *R*, and let *S* be the ſide of a regular polygon of any given ſort inſcribed in that circle; as for inſtance, let *S* be the ſide of an inſcribed ſquare: here then it is plain that neither *R* nor *S* can be changed, but *Q* muſt be changed

changed proportionably; and yet if we ſhould conclude in this caſe that Q is as RS, the illation would be falſe, becauſe R and S have here as much dependence upon one another as Q upon both; for every one knows that the *radius* of a circle cannot be increaſed or diminiſhed in any proportion, but the ſide of a ſquare inſcribed in that circle muſt be increaſed or diminiſhed in the ſame proportion: in this caſe it may be concluded that Q is as $R+S$, or as $R-S$, or as the ſquare root of RS by the third corollary in art. 299, but it muſt by no means be allowed that Q is as RS; for ſhould Q be as RS, ſince in this caſe S is as R, and conſequently RS as R^2, Q would be as R^2 by the ſecond corollary in art. 299, which contradicts the ſuppoſition that Q is as R.

Examples to illuſtrate the foregoing theorem, where direct ratios are only concerned.

303. Ex. 1. *If a body moves for any time with any uniform velocity through any ſpace, that ſpace will be as the time and velocity jointly.* For if we ſuppoſe the velocity to be the ſame in all caſes, but the time to differ, then the ſpace deſcribed will be greater or leſs in proportion as the time is ſo, and therefore will be as the time: on the other hand, if we ſuppoſe the time to be the ſame in all caſes, and the velocity to differ, then the ſpace deſcribed in theſe equal times will be greater or leſs as the velocity is ſo, and conſequently will be as the velocity: laſtly, let us ſuppoſe both the time and velocity to vary; then the ſpace will vary upon both theſe accounts, and therefore will vary in a ratio equal to the ratio wherein the time varies, and the ratio wherein the velocity varies put together; that is, the ſpace in any one caſe will be to the ſpace in any other in a ratio compounded of the ratio of the time in the former caſe to the time in the latter, and of the velocity in the former caſe to the velocity in the latter. This is univerſal; but if we

ſuppoſe the time and velocity to be expreſſed by numbers, we muſt then ſay that the ſpace deſcribed is as the product of the number repreſenting the time multiplied into the number repreſenting the velocity, by the ſecond corollary in the laſt article; or that the ſpace deſcribed in any one caſe is to the ſpace deſcribed in any other as the product of the time and velocity in the former caſe is to a like product in the latter.

Ex. 2. *The quantity of matter in any body depends upon two things*, viz. *its magnitude and denſity (where by denſity I mean the compactneſs or cloſeneſs of its matter)*. For if two bodies of equal denſities but of unequal magnitudes be compared, one body muſt have more matter than the other, or leſs, according as its ſolid content is greater or leſs, that is, according as its magnitude is greater or leſs; therefore in this caſe the quantities of matter in any two bodies thus compared will be as their magnitudes: on the other hand, if two bodies of the ſame magnitude but of different denſities be compared, their quantities of matter will be as their denſities, becauſe the cloſer the parts of a body are, ſo much more matter will be crowded into the ſame ſpace; therefore, if the bodies be different both in magnitude and denſity, the quantity of matter in one body will be to the quantity of matter in the other in a ratio compounded of the ratio of the magnitude of one body to the magnitude of the other, and of the ratio of the denſity of the former body to the denſity of the latter; and therefore, if theſe quantities be repreſented by numbers, the quantity of matter in any body will be as its magnitude and denſity multiplied together. Thus if D and d be the diameters of two globes whoſe denſities are as E to e, the quantity of matter in the former globe will be to the quantity of matter in the latter as $D^3 \times E$ is to $d^3 \times e$; for the ſolid contents of all globes are as the cubes of their diameters.

Ex. 3. *The* momentum, *or force, or* impetus *with which a body moves, and with which it will ſtrike any obſtacle*

obſtacle that lies in its way to oppoſe or ſtop it, is as the velocity of the motion and the quantity of matter in the body jointly. For the ſame quantity of matter moving with different velocities will ſtrike an obſtacle with forces proportionable to the velocities: on the other hand, different quantities of matter moving with the ſame velocity will ſtrike with forces proportionable to their matter; a double body will ſtrike with a double force, *&c.*; therefore, in the caſe where the velocity is the ſame, the *momentum* of a body is as the quantity of matter it contains; and in the caſe where the quantity of matter is the ſame, the *momentum* is as the velocity; therefore, if neither the velocity nor the matter be the ſame, the *momentum* will be as the matter and velocity jointly; and, in numbers, as the product of the number expreſſing the matter multiplied into the number expreſſing the velocity.

Ex. 4. *If a heavy body be ſuſpended perpendicularly upon a lever (by which I mean an inflexible rod moving about a fixt point in the middle), the* momentum *or efficacy of that body to turn the lever about its center is,* cæteris paribus, *as the weight of the body and as the diſtance of the point of ſuſpenſion from the center of the lever jointly.* For if we ſuppoſe this diſtance to be the ſame, the *momentum* of the body to turn the lever muſt be greater or leſs according as its weight is ſo, from whence that *momentum* ariſes: on the other hand, if we ſuppoſe the weight to be always the ſame, but to be removed, ſometimes farther from, and ſometimes nearer to the center, the *momentum* of the body to turn the lever will be greater or leſs in proportion to the diſtance of the point of ſuſpenſion from the center of the lever, as is demonſtrated in Mechanics, and may eaſily be tried by experience: therefore univerſally, the *momentum* of the body will be as this diſtance and the weight of the body jointly; and in numbers is as the product of the weight multiplied into the diſtance.

To illuſtrate this, I ſhall put the following queſtion. Let a body weighing five pounds be ſuſpended at the diſtance of ſix inches from the center of a lever, and let another body of ſeven pounds be ſuſpended on the ſame ſide of the center at the diſtance of eight inches; then let a third body of nine pound weight be ſuſpended on the other ſide of the center at the diſtance of ten inches: *Quære*, whether will theſe bodies ſuſtain each other *in æquilibrio* or not; and if not, on which ſide will the lever dip, and with what *momentum?*

To reſolve this, ſince we are at liberty to repreſent any one of theſe *momenta* by what numbers we pleaſe, provided the reſt be repreſented proportionably, let us repreſent the *momentum* of the nine pound body by the product of its weight and diſtance multiplied together, that is, by 9X10 or 90; then muſt the other *momenta* be repreſented by like products, or they would not be repreſented by numbers proportionable to them: therefore the *momentum* of the five pound body will be 5X6 or 30, and that of the ſeven pound body 7X8 or 56; and therefore the ſum of the *momenta* on this ſide the center acting the ſame way will be 86: whence now it plainly appears that the lever will dip on the ſide of the nine pound body, becauſe 90, the *momentum* on that ſide, is greater than 86, the ſum of the *momenta* on the other ſide: and ſince the exceſs of 90 above 86 is 4, it follows that 4 will be the difference of the *momenta* on one ſide and the other; inſomuch that if any one ſuſtains this lever immoveable, he will ſuſtain the ſame force as if all the weights now upon the lever were taken away, and a ſingle pound weight was ſuſpended at the diſtance of four inches from the center of the lever: therefore when all the weights were upon the lever, if a ſingle pound weight had been ſuſpended at four inches diſtance, and on the ſame ſide of the center with the other two bodies whoſe weights were five and ſeven pounds, the whole ſyſtem would then have conſiſted *in æquilibrio.*

Upon

Upon this theorem, that the force of a body upon a lever is as its weight and diſtance from the center multiplied together, is founded the method of finding the centers of gravity of bodies, or the center of gravity of any ſyſtem of bodies, let their places or poſitions be what they will: but I muſt not carry this matter any farther.

Ex. 5. *If a globe be made to move uniformly in an uniform fluid, the reſiſtance it will meet with in any given time by impinging againſt the particles of the fluid, will be as the denſity of the fluid, and as the ſquare of the diameter of the globe, and as the ſquare of the velocity it moves with jointly.*

To determine rightly in this caſe, we muſt here do what we all along have done, and what we always muſt do in like caſes; that is, we muſt take the whole to pieces, examine every particular circumſtance by itſelf, *cæteris paribus*, and then put them all together. Firſt then let us ſuppoſe the ſame globe to move with the ſame velocity, but ſometimes in a denſer fluid, and ſometimes in a rarer; then it is plain that the denſer the fluid is, the more particles of it the body will be likely to meet with in any given time, and conſequently the greater reſiſtance it will ſuffer from them; therefore the reſiſtance of the body, *cæteris paribus*, will be as the denſity of the fluid. In the next place let us ſuppoſe different globes to move in the ſame fluid, and with the ſame velocity; then, ſince the reſiſtance of theſe globes ariſes only from their ſurfaces, or rather from half their ſurfaces, and ſince the ſurfaces of all globes are as the ſquares of their diameters, it follows that the reſiſtance theſe globes meet with will be as the ſquares of their diameters. Laſtly, let us ſuppoſe the ſame globe to move in the ſame fluid with different velocities; then it is plain that a globe which moves with a double velocity will ſtrike twice as many particles of the fluid in any given time, as it would if it was to move with a ſingle velocity:

but if the body ſtrikes twice as many particles, then twice as many particles will ſtrike it, whence ariſes the reſiſtance; therefore the reſiſtance of a body moving with a double velocity is upon this account double of what it would have been in the caſe of a ſingle velocity: but this is not all; for it will not only ſtrike twice as many particles, but it will ſtrike every particle with twice the force in this caſe of what it would in the caſe of a ſingle velocity; and therefore, ſince action and reaction are always equal, and ſince it is the reaction of the medium that creates the reſiſtance, it follows that a body moving with a double velocity meets with four times the reſiſtance of what it would meet with when moving with a ſingle velocity. In like manner, a body that moves with a triple velocity will act three times as ſtrong upon three times the number of particles, and therefore will ſuffer nine times the reſiſtance of what it would ſuffer with a ſingle velocity; therefore the ſame globe moving in the ſame medium with different velocities will meet with a reſiſtance proportionable to the ſquare of the velocity it moves with. Put now all theſe conſiderations together, and the reſiſtance of a globe moving uniformly in an uniform fluid (I mean that reſiſtance which ariſes from the globe's impinging againſt the particles of the medium) will be as the denſity of the medium, as the ſquare of the diameter of the globe, and as the ſquare of the velocity it moves with jointly. Thus if two globes whoſe diameters are D and d move with velocities which are to one another as V to v in two fluids whoſe denſities are as E to e, the reſiſtance of the former will be to the reſiſtance of the latter as $V^2 \times D^2 \times E$ is to $v^2 \times d^2 \times e$.

Other examples, wherein direct and reciprocal ratios are mixt together.

304. Ex. 6. *If a body be put into motion by any force directly applied, whether this force be a ſingle impulſe acting at once, or whether it be divided into ſeveral impulſes acting ſucceſſively; I ſay that the laſt velocity of this motion will be as the moving force directly, and as the quantity of matter in motion reciprocally.* For if different forces be applied to the ſame quantity of matter, the greater the force is, the greater will be the velocity, and *vice verſa*; therefore in this caſe the velocity will be as the *vis motrix*: but if we ſuppoſe the ſame force to be applied to different quantities of matter, then the greater the quantity of matter is, the leſs will be the velocity, and *vice verſa*, which I thus demonſtrate. Suppoſe the moving force M, when applied to a certain quantity of matter as Q, will produce the velocity V; I ſay then that the ſame force M, applied to a quantity of matter equal to $2Q$, will only produce a velocity equal to $\frac{1}{2}V$: for M acting upon $2Q$ will produce the ſame velocity as $\frac{1}{2}M$ acting upon $1Q$; but $\frac{1}{2}M$ acting upon Q will produce a velocity equal to $\frac{1}{2}V$, becauſe by the ſuppoſition M acting upon Q will produce the velocity V; therefore M acting upon $2Q$ will produce a velocity equal to $\frac{1}{2}V$; and for the ſame reaſon, M acting upon $3Q$ will produce a velocity equal to $\frac{1}{3}V$, *&c.*; therefore, if the *vis motrix* be the ſame, the velocity of the motion produced will be reciprocally as the quantity of matter: therefore univerſally, the velocity will be as the *vis motrix* directly, and as the quantity of matter inverſely. As if M be changed into m, Q into q, and ſo V into v, the ratio of V to v will be equal to the exceſs of the ratio of M to m above the ratio of Q to q. In numbers thus; V will be to

v as $\frac{M}{Q}$ is to $\frac{m}{q}$; ſee the firſt corollary in art. 302. Otherwiſe thus; the *momentum* or *impetus* with which a body moves, is the force with which it will ſtrike an object that lies in its way to ſtop it; therefore ſince action and reaction are equal, the force neceſſary to deſtroy any motion muſt be equal to the *momentum* with which the body moves: but the force neceſſary to deſtroy any motion is equal to the force that produced it, which we call the *vis motrix*; therefore in all motion whatever, the *vis motrix* muſt be equal to the *momentum*, and muſt be as the quantity of matter in the body moved multiplied into the velocity of the motion, becauſe the *momentum* is ſo; ſee the laſt article, example the 3d: therefore M will always be as $V \times Q$ and V as $\frac{M}{Q}$.

If M be as Q, then $\frac{M}{Q}$ will be a ſtanding quantity, and therefore the velocity V in this caſe will always be the ſame. Thus if the weights of all bodies be proportionable to the quantities of matter they contain, they will be equally accelerated in equal times; and *vice verſa*, if all bodies, how different ſoever in the kinds and quantities of matter, be equally accelerated in equal times (as by undoubted experiments upon pendulums we find they are, ſetting aſide the reſiſtance of the air), it follows that the weights of bodies are proportionable to their quantities of matter only, without depending upon their forms, conſtitutions, or any thing elſe.

Ex. 7. *The velocity of a planet moving uniformly in a circle round the Sun is as its diſtance from the centre of the Sun directly, and as its periodical time inverſely.* For if two planets at different diſtances from the Sun perform their revolutions in the ſame time, that planet muſt move with the greateſt velocity that has the greateſt circumference to deſcribe; therefore in

in this caſe, where the periodical time is given or always the ſame, the velocity of the planet muſt be as the circumference of the circle to be deſcribed: but the circumference of every circle is as its diameter or ſemidiameter; therefore, if the periodical time be given, the velocity of a planet muſt be as its diſtance from the Sun directly. Let us now ſuppoſe two planets revolving at the ſame diſtance from the Sun, but in different periodical times; then it is plain that the ſwifter planet will perform its revolution in leſs time, and *vice verſa*; and therefore, if the diſtance be given, the velocity will be reciprocally as the periodical time. Put both theſe caſes together, and the velocity of a planet moving uniformly round the Sun will be as its diſtance from the center of the Sun directly, and as its periodical time inverſely. Thus the Earth's diſtance from the Sun is to that of Jupiter as 10 to 52 nearly; and the Earth's periodical time is to that of Jupiter as 1 year to 12 years nearly, or as 1 to 12; therefore the Earth's velocity is to Jupiter's velocity as $\frac{10}{1}$ is to $\frac{52}{12}$, or as 120 to 52, or as 30 to 13.

This way of reaſoning is applicable to all bodies moving uniformly in circles, let the law of their motions be what it will. But if (as that accurate Aſtronomer *Kepler* has demonſtrated) the planetary motions be ſo tempered that their periodical times are in a ſeſquiplicate ratio of their diſtances, or (which is the ſame thing by art. 297) that the ſquares of their periodical times are as the cubes of their diſtances, we ſhall then have a more ſimple way of expreſſing the velocity of a planet thus: let V be the velocity, and D the diſtance of any planet from the Sun, and let T be the periodical time; then ſince, from what has been ſaid, V is as $\frac{D}{T}$, we ſhall have V^2 as $\frac{D^2}{T^2}$; but, according to *Kep-*

ler's

ler's propoſition, T^2 is as D^3, and $\frac{D^3}{T^2}$, as $\frac{D^3}{D^3}$, or as $\frac{1}{D}$; therefore V^2 is as $\frac{1}{D}$, and V as $\frac{1}{\sqrt{D}}$; that is, in this caſe, the velocity of a planet is reciprocally in a ſubduplicate ratio of its diſtance from the ſun. So the velocity of a planet whoſe diſtance is D is to the velocity of a planet whoſe diſtance is d as $\sqrt{d}$ is to $\sqrt{D}$, or as 1 is to $\sqrt{\frac{D}{d}}$.

Ex. 8. *If a wheel turns uniformly about its* axis, *the time of one round will be as the diameter of the wheel directly, and as the abſolute velocity of every point in the circumference of the wheel inverſely.* For if the circumference of a great wheel moves with the ſame velocity as the circumference of a ſmall one, the periodical time of the former wheel will be as much greater in proportion than the periodical time of the latter as the circumference of the former wheel is greater than the circumference of the latter, or as the diameter of the former is greater than the diameter of the latter; therefore if the velocity of the wheel's circumference be given, the periodical time will be as the diameter of the wheel directly: let us now ſuppoſe the velocity of the circumference of the ſame wheel to be in any caſe increaſed; then will the periodical time be diminiſhed in a contrary proportion, and *vice verſa*; therefore if the diameter of a wheel be given, the periodical time will be reciprocally as the velocity of the circumference; therefore if neither the diameter nor the velocity of the circumference be given, the periodical time will be as the diameter of the wheel directly, and as the abſolute velocity of every point in the circumference inverſely. In numbers the periodical time will be as $\frac{D}{V}$.

Ex.

Ex. 9. *The relative gravity of any ſpecies of bodies is as the abſolute weight of any body of that ſpecies directly, and as its magnitude inverſely*; where by the magnitude or bulk of a body is meant the quantity of ſpace it takes up, and not the quantity of matter it contains.

All bodies of the ſame kind are ſuppoſed to weigh in proportion to their magnitudes; and therefore if a body of any one kind be compared with a body of the ſame magnitude of another kind, the proportion of their weights will always be the ſame, let their common magnitude be what it will; and hence ariſes the compariſon in general of the weight of one ſpecies of bodies with the weight of another: if a cubic inch of gold be 19 times as heavy as a cubic inch of water, then a cubic foot of gold will be 19 times as heavy as a cubic foot of water, *&c.*; and ſo we pronounce in general that gold is 19 times as heavy as water, though we mean bulk for bulk. In this ſenſe therefore may any one ſpecies of bodies be ſaid to be heavier or lighter than another, in proportion as any one body of the former ſpecies is heavier or lighter than a body of the ſame magnitude of the latter, which is the ſame in effect with the firſt part of my aſſertion. Let us now compare bodies of the ſame weight, but of different magnitudes; and then it will appear that the ſpecific gravities of theſe bodies, that is, of the ſeveral ſpecies to which they belong, will be reciprocally as the magnitudes of the bodies compared: thus if a cubic inch of gold be as heavy as 19 cubic inches of water, then the ſpecific gravity of gold will be to the ſpecific gravity of water, not as 1 to 19, but as 19 to 1; for if one cubic inch of gold be as heavy as 19 cubic inches of water, then 1 cubic inch of gold will be 19 times as heavy as 1 cubic inch of water; and therefore, from what has been ſaid in the former caſe, the ſpecific gravity of gold will be to the ſpecific gravity of water as 19 to 1. Put both theſe caſes together, and the relative gravity of any ſpecies of bodies will be as the abſolute weight of any one body

body of that ſpecies directly, and as its magnitude inverſely. Thus if in numbers P and p be the weights of two globes whoſe diameters are D and d, the ſpecific gravities of the metals out of which theſe two globes were formed are as $\frac{P}{D^3}$ to $\frac{p}{d^3}$.

Ex. 10. *If a body as* A *gravitates toward the center of a planet as* B *at the diſtance* D; *I ſay then that the weight of* A *will be as the quantity of matter in* A *directly, and as the quantity of matter in* B *directly, and as the ſquare of the diſtance* D *inverſely.* For the weight of the whole body A towards B ariſes, *cæteris paribus*, from the weight of all its parts; and therefore in ſuch a caſe will be as the quantity of matter in A. Again, the weight of A towards the whole planet B ariſes, *cæteris paribus*, from the weight of A to all the parts of B; and therefore in ſuch a caſe will be as the quantity of matter in B. Laſtly, if the quantities of matter in A and B continue the ſame, and the diſtance D be ſuppoſed to vary, the great *Newton* has demonſtrated that the weight of A towards B will be reciprocally as the ſquare of the diſtance D. Therefore if neither the quantities of matter in A and B, nor the diſtance D be the ſame, the weight of A towards B will be as the quantity of matter in A directly, and as the quantity of matter in B directly, and as the ſquare of the diſtance D inverſely. Thus if A and B be numbers repreſenting the quantities of matter in the bodies A and B reſpectively, the weight of A towards B at the diſtance D will be as $\frac{AB}{D^2}$, that is, the weight of A towards B at the diſtance D will be to the weight of a towards b at the diſtance d as the fraction $\frac{AB}{D^2}$ is to the fraction $\frac{ab}{d^2}$.

Hence

Hence the weight of A towards B will be equal to the weight of B towards A, ſince both will be repreſented by the ſame quantity $\frac{AB}{D^2}$.

Another way of treating the examples in the two laſt articles.

305. *If there be ever ſo many quantities, and theſe all heterogeneous to one another, we are at liberty to repreſent them by what number we pleaſe, or even all by unity itſelf, provided we take care to repreſent all other quantities of like kinds by proportionable numbers.* Thus I am at liberty to call any quantity of time I pleaſe 1, or any degree of velocity 1, or any quantity of ſpace 1; but then I muſt take care to call a double time, or a double velocity, or a double ſpace, by the number 2, and ſo on. This conſideration ſuggeſts to us another way of treating the examples in the two laſt articles, ſomewhat different from the former; which, as it may be explained by a bare inſtance or two, I ſhall give the learner as follows:

In the firſt example we were taught that the ſpace deſcribed by a body moving uniformly for any time, and with any velocity, is in numbers as the time and velocity multiplied together; which may alſo be demonſtrated thus: ſuppoſe that a body moving uniformly in ſome known time called 1, and with ſome velocity called 1, ſhall deſcribe a ſpace which we will alſo call 1; then if in the time 1, and with the velocity 1, there be deſcribed the ſpace 1, it is plain that in the time T, and with the velocity 1, there will be deſcribed the ſpace T; but if in the time T, and with the velocity 1, there be deſcribed the ſpace T, then in the time T, and with the velocity V, there will be deſcribed the ſpace VT, and that, let the quantities V and T be what they will; and therefore, in all caſes, the ſpace will be as $T \times V$.

Again

Again, in the ſixth example it was ſhewn that if any moving force as M be directly applied to any body whoſe quantity of matter is Q, the velocity thereby produced will be as $\frac{M}{Q}$: for a future demonſtration whereof, let us ſuppoſe that ſome known force called 1, when applied to ſome quantity of matter called 1, will produce the velocity 1; then will the force 2 applied to the ſame quantity of matter 1 produce the velocity 2; but if the force 2 when applied to the quantity of matter 1 produce the velocity 2, then the ſame force 2 applied to a quantity of matter as 3 will produce a velocity equal to a third part of the former, to wit $\frac{2}{3}$; and for the ſame reaſon the force M applied to a quantity of matter as Q will produce the velocity $\frac{M}{Q}$; and therefore this velocity will always be as $\frac{M}{Q}$.

It is not impoſſible but that ſome of my leſs judicious readers may be inclined to think I have ſpun out this ſubject to too great a length: but I eaſily perſuade myſelf that there are none who have thoroughly conſidered the very great uſefulneſs and importance of this doctrine, eſpecially in Mechanical and Natural Philoſophy, but will readily acquit me of this charge; and the more ſo, becauſe none that I know of have digeſted theſe matters into a ſyſtem, or have written ſo diſtinctly upon them as the importance of the ſubject requires.

THE

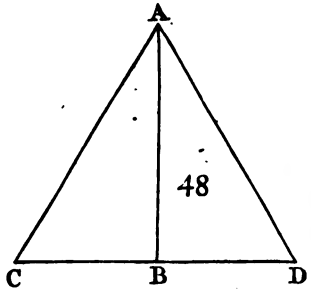
A
48
C
B
D

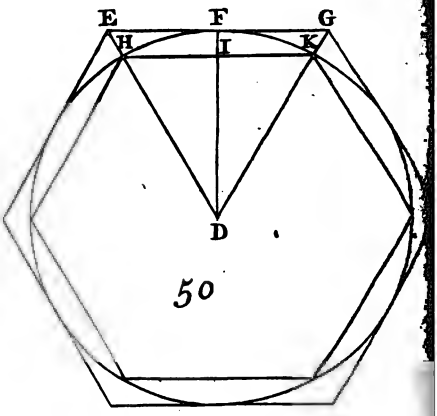
E
F
G
H
I
K
D
50

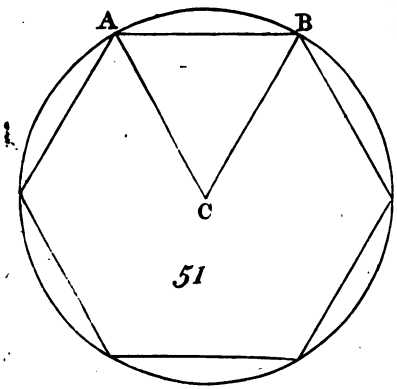
A
B
C
51

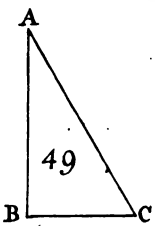
A
49
B
C

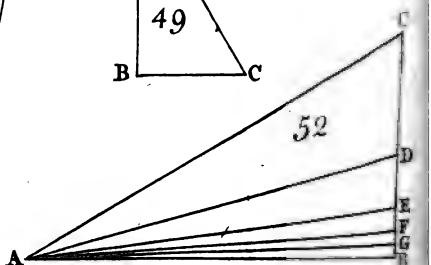
C
52
D
E
F
G
R
A

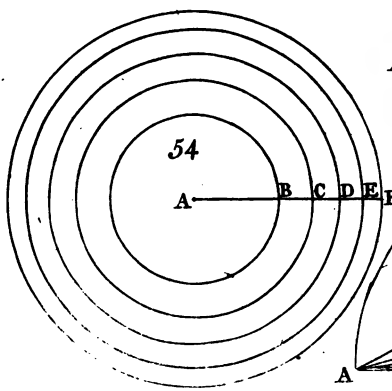
54
A
B
C
D
E
F

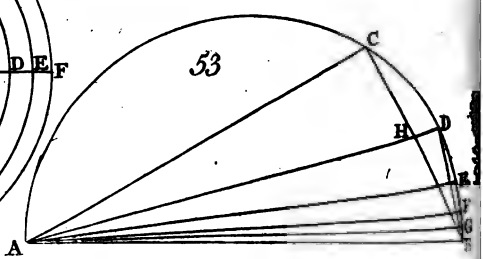
C
53
H
D
A

THE ELEMENTS OF ALGEBRA.

BOOK VIII. PART II.

Of Prisms, Cylinders, Pyramids, Cones, and Spheres.

MANY of the following articles concerning the circle, sphere, and cylinder, are taken out of *Archimedes*, but demonstrated another way: and though they have no immediate relation to Algebra, yet as there are not many of them, and as they are a sort of supplement to *Euclid's* Geometry, I have been prevailed upon to insert them here, for the sake of those who cannot read *Archimedes*, and for the ease of those who can. Moreover, as *Euclid's* doctrine of solids is somewhat hard of digestion as it is delivered in the Elements, I have not scrupled to transfer some of the chief properties of cones and pyramids into this book, and to demonstrate them after a more easy and simple manner. And lastly, as the mensuration of the circle is absolutely necessary to the mensuration of the cylinder, cone, and sphere, I shall, before I enter upon the rest, explain what *Archimedes* has delivered upon that head.

A Lemma.

340. *If in a right-angled triangle one of the acute angles be thirty degrees, or a third part of a right one, the oppoſite ſide will be equal to half the hypotenuſe.* (Fig. 48.)

Let *ABC* be a right-angled triangle, right-angled at *B*, and let the angle *BAC* be 30 degrees; I ſay then that the oppoſite ſide *BC* will be half the hypotenuſe *AC*.

For producing *CB* beyond *B* to *D*, ſo that *BD* may be equal to *BC*, and drawing *AD*, the two triangles *ABC* and *ABD* will be ſimilar and equal; therefore the angle *CAD* will be 60 degrees, and the lines *AC* and *AD* will be equal; therefore the other two angles at *C* and *D* will be 60 degrees each, and the triangle *ACD* will be equilateral; therefore the line *BC*, which is the half of *CD*, will alſo be the half of *AC*. *Q. E. D.*

A Lemma. (*Fig.* 49, 50).

341. *Let* ABC *be a right-angled triangle, right-angled at* B; *and ſuppoſing two ſimilar and equilateral polygons, one to be circumſcribed about a circle, and the other to be inſcribed in it, let the angle* BAC *be equal to half the angle at the center ſubtended by a ſide of either polygon: I ſay then that* AB *will be to* BC *as the diameter of the circle to the ſide of the circumſcribed polygon; and that* AC *will be to* BC *as the diameter of the circle is to the ſide of the inſcribed polygon.*

Let *D* be the center of the circle, let *EFG* be a ſide of the circumſcribed polygon, touching the circle in the point *F*, and let *HIK* be the ſide of a like polygon inſcribed, and let *HK* and *EG* be ſuppoſed parallel, ſo as to ſubtend the ſame angle at the center. Draw the lines *DHE*, *DIF*, *DKG*; then will the three triangles *ABC*, *DEF* and *DHI* be ſimilar, having the angles at *B*, *F*, and *I* right, and the angle *BAC* being equal to the angle *EDF* by the ſuppoſition; therefore

AB

AB will be to *BC* as *DF* to *EF*, or as 2*DF* to *EG*, that is, as the diameter of the circle is to the ſide of the circumſcribed polygon; and *AC* will be to *BC* as *DH* to *HI*, or as 2*DH* to *HK*, that is, as the diameter of the circle is to the ſide of the inſcribed polygon. *Q. E. D.*

If the angle BAC *be a 48th part of a right one,* AB *will be to* BC *as the diameter of any circle is to the ſide of a regular polygon of* 96 *ſides circumſcribed about it, and* AC *will be to* BC *as the diameter is to the ſide of a like polygon inſcribed.* For if the line *HIK* be the ſide of an inſcribed regular polygon of 96 ſides, the arc *HFK* will be a 96th part of the whole circumference, or a 24th part of a quadrant, and the arc *HF* a 48th part of a quadrant; whence the angle *EDF* or *HDI* will be a 48th part of a right angle.

A THEOREM.

342. *The circumference of every circle is ſomewhat more than three diameters.* (Fig. 51.)

Let *AB* be the ſide of a regular hexagon inſcribed in a circle whoſe center is *C*, and draw *AC* and *BC*: then will the angle at *C* in the triangle *ABC* be 60 degrees, as containing a ſixth part of the whole circumference; therefore ſince *AC* and *BC* are equal, the other two angles at *A* and *B* will be 60 degrees each; therefore the triangle *ABC* will be equiangular, and conſequently equilateral; therefore *AB* will be equal to *AC*, and 6*AB* to 6*AC*; but 6*AB* is equal to the perimeter of the inſcribed hexagon, and 6*AC* is equal to three diameters; therefore the perimeter of a regular hexagon inſcribed in a circle is equal to three times the diameter of that circle: whence it follows that the circumference of the circle itſelf will be ſomewhat more than three diameters. *Q. E. D.*

A Theorem.

343. *If the diameter of a circle be called* 1, *the circumference will be ſomewhat leſs than* $3\frac{10}{70}$ *and ſomewhat greater than* $3\frac{10}{71}$.

The demonſtration of the firſt part. (Fig. 52.)

Let *ABC* be a right angle, in which inſcribe the lines *AC*, *AD*, *AE*, *AF*, *AG* in the manner following: make the angle *BAC* a third part of a right one, *BAD* a 6th part, *BAE* a 12th part, *BAF* a 24th part, and *BAG* a 48th part: then will *AC* be double of *BC* by the 340th article, and *AB* will be to *BG* as the diameter of any circle is to the ſide of a regular polygon of 96 ſides circumſcribed about it by the 341ſt article. Moreover, as the line *AD* biſects the angle *BAC*, we ſhall have as *AB* to *AC* ſo *BD* to *DC* by the third of the ſixth book of the Elements; and by art. 330*, $AB+AC$ is to *AB* as *BC* is to *BD*; and by permutation, $AB+AC$ is to *BC* as *AB* is to *BD*: therefore if *BC* be divided into any number of equal parts, how many ſoever of theſe parts are contained in the ſum of the lines *AB* and *AC*, the ſame number of like parts of *BD* will be contained in the line *AB* alone; as if *BC* be divided into 10000 equal parts, and the ſum $AB+AC$ contains 37320 of thoſe parts, then if the line *BD* be divided into 10000 equal parts, the line *AB* alone will contain 37320 of them. After the ſame manner it may be demonſtrated, that whatever parts of *BD* are contained in the ſum of the lines *AB*, *AD*, the ſame number of like parts of *BE* will be contained in *AB* alone, and ſo on: whence we have the following proceſs.

1ſt. Let *BC* be divided into 10000 equal parts, or (which is the ſame thing) let *BC* be called 10000;

* See the Quarto Edition, p. 539.

then

then will AC be 20000, and conſequently AB will be greater than 17320, and $AB+AC$ will be greater than 37320.

2dly, Therefore if $BD=10000$, AB will be greater than 37320, AD greater than 38636, and $AB+AD$ greater than 75956.

3dly, Therefore if $BE=10000$, AB will be greater than 75956, AE greater than 76611, and $AB+AE$ greater than 152567.

4thly, Therefore if $BF=10000$, AB will be greater than 152567, AF greater than 152894, and $AB+AF$ greater than 305461.

5thly, Therefore if $BG=10000$, AB will be greater than 305461 : therefore *e converſo*, if AB be ſuppoſed equal to 305461, BG will be leſs than 10000: but it was ſhewn before that AB is to BG as the diameter of any circle is to the ſide of a regular polygon of 96 ſides circumſcribed about that circle; therefore if the diameter of any circle be called 305461, the ſide of ſuch a polygon will be leſs than 10000, and the whole perimeter leſs than 960000; therefore the perimeter of ſuch a polygon will be leſs than the product of the diameter multiplied into $3\frac{10}{70}$ or $\frac{22}{7}$: for $305461\times\frac{22}{7}=960020\frac{2}{7}$: therefore if the diameter of any circle be called 1, the perimeter of a regular polygon of 96 ſides circumſcribed about it will be leſs than $3\frac{10}{70}$; but the circumference of every circle is leſs than the perimeter of any polygon circumſcribed about it; therefore the circumference of the circle will ſtill be leſs than $3\frac{10}{70}$. *Q. E. D.*

The demonſtration of the ſecond part. (Fig. 53.)

Let *ACDEFGB* be a ſemicircle whoſe diameter is *AB*, and in this ſemicircle let the lines *AC*, *AD*, *AE*, *AF*, *AG* be inſcribed in the manner following: make the angle *BAC* a third part of a right one, *BAD* a ſixth part, *BAE* a 12th part, *BAF* a 24th part, and *BAG* a 48th part, and join *BC*, *BD*, *BE*, *BF*, *BG*; then will *AB* be double of *BC*, and *AB* will be to *BG* as the diameter of any circle is to the ſide of a regular polygon of 96 ſides inſcribed. Let *AD* cut *BC* in *H*; and by the demonſtration of the firſt part of this theorem, *AC*+*AB* will be to *CB* as *AC* to *CH*, ſince by the conſtruction the line *AH* biſects the angle *BAC*: but the triangles *ACH* and *ADB* are ſimilar, having the angles at *C* and *D* right, as being in a ſemicircle, and the angle *CAH* being equal to the angle *DAB*; therefore *AC* will be to *HC* as *AD* to *BD*: but it was before demonſtrated, that as *AC* is to *HC* ſo is *AB*+*AC* to *BC*; therefore as *AB*+*AC* is to *BC* ſo is *AD* to *BD*; and whatever parts of *BC* are contained in the ſum of the lines *AB*, *AC*, the ſame number of like parts of *BD* will be contained in the line *AD* alone: whence the following proceſs.

1ſt, Let *BC*=10000; then will *AB*=20000, *AC* will be leſs than 17321, and *AB*+*AC* will be leſs than 37321.

2dly, Therefore if *BD*=10000, *AD* will be leſs than 37321, *AB* will be leſs than 38638, and *AB*+*AD* will be leſs than 75959.

3dly, Therefore if *BE*=10000, *AE* will be leſs than 75959, *AB* will be leſs than 76615, and *AB*+*AE* will be leſs than 152574.

4thly, Therefore if *BF*=10000, *AF* will be leſs than 152574, *AB* will be leſs than 152902, and *AB*+*AF* will be leſs than 305476.

5thly, Therefore if *BG*=10000, *AG* will be leſs than 305476, and *AB* will be leſs than 305640; therefore

therefore *e converſo*, if *AB* be equal to 305640, *BG* will be greater than 10000: but *AB* is to *BG* as the diameter of any circle is to the ſide of a regular polygon of 96 ſides inſcribed in it; therefore if the diameter of any circle be 305640, the ſide of ſuch an inſcribed polygon will be greater than 10000, and its perimeter greater than 960000; therefore the perimeter of ſuch a polygon will be greater than the product of the diameter multiplied into $3\frac{10}{71}$ or $\frac{223}{71}$: for $305640\times\frac{223}{71}=959968-\frac{8}{71}$: therefore if the diameter of a circle be called 1, the perimeter of a regular hexagon of 96 ſides inſcribed in it will be greater than $3\frac{10}{71}$: but the circumference of every circle is greater than the perimeter of any inſcribed polygon; therefore the circumference of this circle will be greater ſtill than $3\frac{10}{71}$. *Q. E. D.*

Thus then if the diameter of a circle be called 1, the circumference muſt lie between theſe two very narrow limits, to wit, $3\frac{10}{70}$ and $3\frac{10}{71}$: the whole difference of theſe limits is but $\frac{1}{497}$, and therefore, by this method, the circumference of a circle is determined to a 497th part of the diameter.

The moſt compendious way of obtaining the numbers in the laſt article.

344. If any one has a mind to examine the foregoing calculations, it may not be amiſs to let him know, that the hypotenuſes of the triangles *ABD*, *ABE*, *ABF* and *ABG* (*Fig.* 52, 53) may be computed without either ſquaring the greater leg, or extracting

tracting the more conſiderable part of the ſquare root. As if *AD* (*Fig.* 52.) the hypotenuſe of the triangle *ABD* in the firſt part be required, having given *AB* 37320 and *BD* 10000, the method I uſe is as follows:

1ſt, Whatever the hypotenuſe *AD* may be, this is certain, that the greater leg *AB* will be equal to a conſiderable part of it; and therefore if *AD* be to be found by a ſeries, as is uſual in extracting the ſquare root, it will be proper to make *AB* the firſt term; and hence it is that I call $37320 = AB$ my firſt root. Again, as the ſquare of *AD* is to exceed the ſquare of *AB* by the ſquare of *BD*, that is, by 100000000; this number I call my firſt reſolvend, and then doubling my firſt root, the product 74640 I call my firſt diviſor, and ſo am prepared for the following operation,

2dly, Thus prepared, I divide my firſt reſolvend by my firſt diviſor, and the firſt figure of the quotient (for I am concerned for no more at preſent) I find to be 1, which, as it comes out of the place of thouſands, ſignifies 1000; this number therefore 1000 I add to my firſt root, and ſo have 38320 for a more correct or ſecond root. The ſame number 1000 I add alſo to my firſt diviſor, and then multiplying the ſum 75640 by 1000, the number that was added, I ſubtract the product 75640000 from my firſt reſolvend, and there remains 2436000; this I call my ſecond reſolvend, and the double of my ſecond root, to wit 76640, I call my ſecond diviſor, and ſo proceed to the next operation,

3dly, Now I divide my ſecond reſolvend by my ſecond diviſor, and the firſt figure of the quotient is 3, which, as it comes out of the place of hundreds, ſignifies 300; therefore I add 300 to my ſecond root, and ſo have 38620 for my third root; the ſame number 300 I alſo add to my ſecond diviſor, and the ſum 76940 I multiply by 300, and the product is 23082000, which, being ſubtracted from my ſecond reſolvend, leaves me 1278000 for a third reſolvend,

and

and the double of my third root, to wit 77240, I have for my third diviſor.

4thly, I divide my third reſolvend by my third diviſor, and the firſt figure of the quotient is 1, which ſignifies 10; therefore I add 10 to my third root, and ſo have a fourth root 38630: moreover adding 10 to my third diviſor, the ſum is 77250, which being multiplied by 10, and the product 772500 being ſubtracted from the third reſolvend, leaves 505500 for the fourth reſolvend, and the double of my fourth root, to wit 77260, makes a fourth diviſor.

5thly and laſtly, I divide my fourth reſolvend by my fourth diviſor, and the neareſt quotient too little is 6; therefore I add 6 to my fourth root, and ſo have a fifth root, to wit, 38636, which is the neareſt root leſs than the true that can be expreſſed in whole numbers: therefore the hypotenuſe *AD* is greater than 38636.

The reaſon of theſe operations will not be difficult to any one who thoroughly underſtands the foundation of the common method of extracting the ſquare root.

Van Ceulen's *numbers expreſſing the circumference of a circle whoſe diameter is* 1.

345. This method of *Archimedes* is capable of being purſued to any degree of exactneſs required: nay *Ludolf Van Ceulen* has computed the circumference of a circle to no fewer than 36 places, upon a ſuppoſition that the diameter is unity. His numbers expreſſing this circumference are,

3 .1415 9265 3589 7932 3846 2643 3832 7950 288 +.

But ſince the invention of fluxions by its great author Sir *Iſaac Newton*, he (Sir *Iſaac*) has from this method drawn ſerieſes almoſt infinitely more expeditious than the biſections of *Archimedes* or *Van Ceulen*, whereby the circumference of a circle may be computed to 12 or 13 places in little more than half an hour's time,

as Doctor *Halley* from his own experience assures us.

Note, that *Metius's* proportion of the diameter of a circle to the circumference is as 113 to 355, the most accurate of any in such small numbers. (See Schol. 1. in art. 179*).

Why the circle cannot be squared geometrically.

346. If, having given the diameter or semidiameter of any circle, a right line could be found exactly equal to the circumference, whether such a line could be expressed by numbers or not, the circle might be squared as well as any right-lined figure whatever, that is, a square might be constructed whose area would be equal to that of the circle, which I thus demonstrate.

Let $2r$ represent the diameter of any circle, and $2c$ the circumference; then will rc, the product of the *radius* into the semicircumference, be its area, by cor. 4 in art. 311 †. Let now x be the side of a square whose area is equal to that of the circle, and we shall have $xx=rc$; whence x will be a mean proportional between r and c, and may be found by the 13th of the sixth book of the Elements. But it is impossible upon *Euclid's postulata*, having given the diameter or semidiameter of any circle, to find a right line exactly equal to the circumference; and therefore the circle cannot be squared upon the same foundation on which we are taught to square all right-lined figures; and hence it is that we say, the circle cannot be squared geometrically. But as the three *postulata* of *Euclid*, how simple soever they may appear in theory, are never a one of them capable of being perfectly executed, but that errors must necessarily arise in drawing and producing lines, in taking the distances of points, &c.; and as from these errors others must necessarily arise in subsequent

* See the Quarto Edition, p. 285. † Ibid. p. 504.

operations;

operations; and laſtly, as the circumference of a circle may be had from the diameter in numbers, to any aſſignable degree of exactneſs, it follows that in practice, a circle is as capable of being ſquared as any other figure whatever that is not a ſquare.

Corollaries drawn from art. 343.

347. From the 343d article may be deduced ſeveral corollaries, ſome of the moſt uſeful whereof are inſerted here as follows:

1ſt, *The diameter of every circle is to the circumference as* 7 *to* 22 *nearly:* for 1 is to $3\frac{10}{70}$ or $\frac{22}{7}$ as 7 to 22.

2d, *If* d *be the diameter of any circle, its area will be* $\frac{11dd}{14}$: for as 7 is to 22, ſo is *d* the diameter to $\frac{22d}{7}$ the circumference; and if $\frac{d}{2}$ the *radius* be multiplied into $\frac{11d}{7}$ the ſemicircumference, the product $\frac{11dd}{14}$ will be the area, by corollary 4 in art. 311*.

3*d*, *Hence we have a ready way, having the diameter of any circle given to find its area, and* vice verſa, *without the mediation of the circumference, by ſaying, as* 14 *is to* 11, *ſo is the ſquare of the given diameter to the area ſought. But if the area be given, in order to find the diameter, the proportion muſt be reverſed, by ſaying as* 11 *is to* 14, *ſo is the given area to a fourth, which fourth number will be the ſquare of the diameter, and its ſquare root the diameter itſelf.*

4th, Arguing as in the two laſt corollaries, *If the diameter of a circle be to the circumference as* a *to* b, *then the ſquare of the diameter of any circle will be to its area as* 4a *to* b; *and* vice verſa, *the area will be to the ſquare of the diameter as* b *to* 4a.

* See the Quarto Edition, p. 504.

4th,

5th, *The circumferences of all circles are as their diameters or ſemidiameters, and their areas as the ſquares of the diameters or ſemidiameters.* For if d and e be the diameters of two circles, their circumferences will be $\frac{22\,d}{7}$ and $\frac{22\,e}{7}$; and $\frac{22\,d}{7}$ is to $\frac{22\,e}{7}$ (dropping the common denominator 7, and the common factor 22) as d to e. Again, the area of the circle whoſe diameter is d is $\frac{11\,dd}{14}$ as in the ſecond corollary; and for the ſame reaſon, the area of the other circle whoſe diameter is e is $\frac{11\,ee}{14}$; and $\frac{11\,dd}{14}$ is to $\frac{11\,ee}{14}$ as dd to ee; therefore the circumferences of all circles are as their diameters, and their areas as the ſquares of their diameters. And ſince the halves of all quantities are as the wholes, and the ſquares of the halves as the ſquares of the wholes, it follows alſo that the circumferences of circles are as their ſemidiameters, and their areas as the ſquares of the ſemidiameters.

6th, *If there be three circles ſuch, that the ſum of the ſquares of the ſemidiameters of two of them is equal to the ſquare of the ſemidiameter of the third; I ſay then that the areas of the two firſt circles put together will be equal to the area of the third.* For let a, b, c repreſent the ſemidiameters of the three circles, and let $a^2+b^2=c^2$: ſince then the ſemidiameter of the firſt circle is a, the diameter will be $2a$, and the ſquare of the diameter $4aa$: but as 14 is to 11 ſo is $4aa$ to $\frac{44a^2}{14}$ or $\frac{22\,a^2}{7}$; therefore the area of the firſt circle will be $\frac{22a^2}{7}$ by the third corollary; and for the ſame reaſon, the areas of the other two circles will

will be $\frac{22\,b^2}{7}$ and $\frac{22\,c^2}{7}$: but $a^2+b^2=c^2$ *ex hypotheſi:* therefore $\frac{22\,a^2}{7}+\frac{22\,b^2}{7}=\frac{22\,c^2}{7}$.

N. B. This laſt corollary is not demonſtrated in the 31ſt of the ſixth book of the Elements, as ſome may imagine, that demonſtration not reaching farther than right-lined figures.

The following eaſy problems may ſerve to ſhew ſome uſes of the following corollaries.

Problem I.

348. *To find the proportion between the diameter of any circle and the ſide of an equal ſquare.*

Call this diameter 1, and by the ſecond corollary in the foregoing article, the area of this circle will be $\frac{11}{14}$ nearly; and the ſide of a ſquare whoſe area is $\frac{11}{14}$ will be $\sqrt{\frac{11}{14}}$: therefore the diameter of any circle is to the ſide of an equal ſquare as 1 to $\sqrt{\frac{11}{14}}$. But becauſe this fraction $\frac{11}{14}$, though it ſerves well enough for common purpoſes, is not accurately true, and becauſe its ſquare root cannot be accurately expreſſed in numbers neither, to reduce the error (for there muſt be an error) to a more ſimple point, let c be the circumference of a circle whoſe diameter is 1; and the area of ſuch a circle, that is, the product of the *radius* into the ſemi-circumference, will be $\frac{1}{2}\times\frac{c}{2}=\frac{c}{4}$; and the ſide of an equal ſquare will be $\sqrt{\frac{c}{4}}$; but, according to *Van Ceulen*, $c=3.1415926536$, and $\frac{c}{4}=.7853981634$,

and

and $\sqrt{\frac{c}{4}} = .88623$; therefore the diameter of a circle is to the side of an equal square as 1 to .88623. or as 100000 is to 88623: suppose the proportion to be that of 100000 to 88625, which makes but an error of 2 in the fifth place, and then multiplying both terms by 8, the proportion will be that of 800000 to 709000, or of 800 to 709; therefore *As 800 is to 709, so is the diameter of any circle to the side of an equal square, nearly true to five places.*

N. B. If the diameter of a circle be 9 yards, the side of an equal square found as above will not err an hundredth part of an inch.

PROBLEM 2.

349. *To find the semidiameter of a circle that will comprehend within its circumference the quantity of an acre of land.*

An acre of land contains 4840 square yards, and therefore this must be the area of our circle. Say then, as 11 to 14, so 4840 to 6160; and this last number will be the square of the diameter, by the third corollary in art. 347; whence the diameter itself will be 78 .486 yards, and the semidiameter 39 .243 yards, that is 39 yards $8\frac{3}{4}$ inches nearly.

PROBLEM 3.

350. *Let a string of a given length be disposed into the form of a circle: It is required to find the area of this circle.*

Let r be the length of the string, and consequently the circumference of the circle made by it, and the diameter of the circle will be $\frac{7c}{22}$, the semidiameter $\frac{7c}{44}$, and the area $\frac{7cc}{88}$. Suppose now this string to be disposed into the form of a square, and the side of

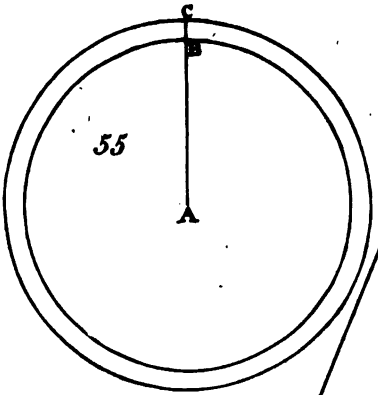
C
B
55
A

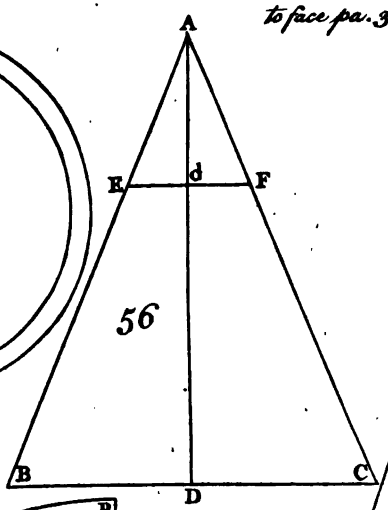
A
E
d
F
56
B
D
C

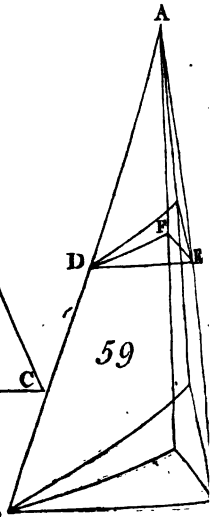
A
F
D
E
59
B

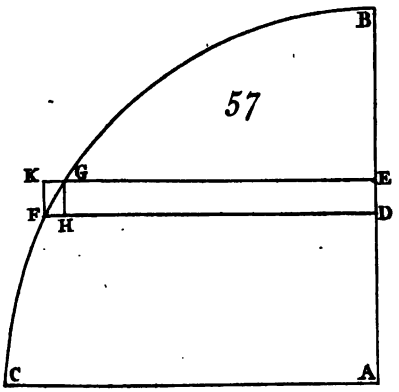
B
57
K
G
E
F
H
D
C
A

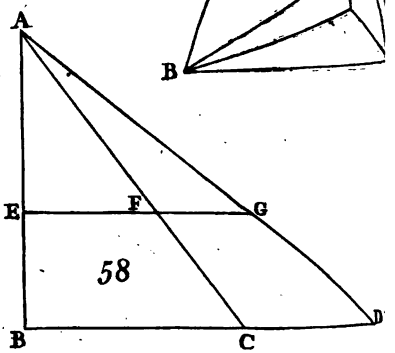
A
E
F
G
58
B
C
D

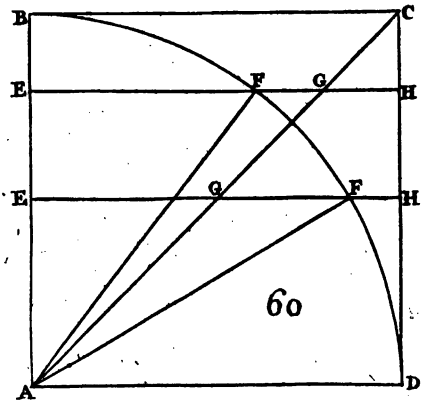
B
C
E
F
G
H
E
G
F
H
60
A
D

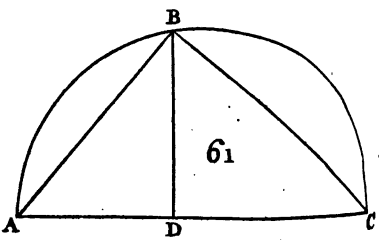
B
61
A
D
C

of this ſquare would be $\frac{c}{4}$, and its area $\frac{cc}{16}$, and the area of the ſquare would be to the area of the circle as $\frac{cc}{16}$ is to $\frac{7cc}{88}$, that is, as $\frac{1}{16}$ is to $\frac{7}{88}$, or as 11 to 14: therefore, *As* 11 *is to* 14, *ſo is the area comprehended by the ſtring when in form of a ſquare, to the area comprehended by the ſame ſtring when in form of a circle.* Q. E. I.

N. B. By the anſwer here given it appears, that if c be the circumference of any circle, its area will be $\frac{7cc}{88}$; and conſequently that *As* 88 *is to* 7, *ſo is the ſquare of the circumference of any circle to its area nearly.*

Problem 4.

351. *It is required to divide a given circle into any number of equal parts by means of concentric circles drawn within it.* (Fig. 54.)

Let A be the center, and AF be the ſemidiameter of the circle given, and let it be required to divide the area of this circle into five equal parts by means of four concentric circles deſcribed within the former, and cutting the line AF in the points B, C, D, E, that is, let the area of the circle AB, and the areas of the *annuli* BC, CD, DE, and EF be ſuppoſed all equal; then the circle AB will be $\frac{1}{5}$ of the whole, the circle AC $\frac{2}{5}$, the circle AD $\frac{3}{5}$, *&c.*; and the area of the circle AF will be to the area of the circle AB as 5 to 1: but the area of the circle AF is to the area of the circle AB as the ſquare of the ſemidiameter AF is to the ſquare of the ſemidiameter AB, by cor. 5. in art. 347; therefore AF^2 is to AB^2 as 5 to 1: but AF^2 is given by the ſuppoſition; therefore AB^2, and conſequently AB the ſemidiameter of the inmoſt circle is given. In like manner AF^2 is to AC^2 as 5

to 2; whence AC the semidiameter of the next concentric circle is given; and so of the rest. *Q. E. I.*

Problem 5.

352. *Whoever makes a tour round the earth, must necessarily take a larger compass with his head than with his feet: The question is, how much larger?*

Let A (*Fig.* 55.) represent the center of the earth, AB its semidiameter, BC the traveller's height, AC the semidiameter of the circle described by his head: let also b represent the circumference of the circle whose semidiameter is AB, and c the circumference of the circle whose semidiameter is AC, and $c-b$ will be the difference we are now enquiring into, which may be thus determined.

By the fifth corollary in art. 347, AC is to AB as c is to b; and by division of proportion, BC is to AB as $c-b$ is to b; and alternately, BC is to $c-b$ as AB is to b. Let d be the circumference of a circle whose semidiameter is BC, and BC will be to d also as AB to b; therefore BC is to d as BC is to $c-b$; therefore $c-b=d$; that is, *The traveller's head will pass through more space than his feet by the circumference of a circle whose semidiameter is his own length*: as if the man be 6 feet high, his head will travel farther than his heels by 37 feet $8\frac{4}{7}$ inches nearly, and that whether the semidiameter AB be greater or less, or nothing at all.

Problem 6.

353. *It is required, having given the depth and the diameter of the base of any cylindrical vessel, to find its content in ale gallons.*

Here it must be observed, that in the mensuration of a solid, all its dimensions must be taken in the same kind of measure: as, if any one dimension be taken in inches, the rest must be taken so too, and then the number representing the content of any solid

ſolid will be the number of cubic inches to which that ſolid is equivalent.

Let then a be the given altitude of the cylindrical veſſel to be meaſured, d the diameter of its baſe, and by the ſecond corollary in art. 347, $\frac{11dd}{14}$ will give a number of ſquare inches equal to the baſe, and this area multiplied into the altitude a, will give $\frac{11\,add}{14}$, a number of cubic inches equal to the ſolid content of the veſſel: but 282 cubic inches conſtitute an ale gallon; and therefore if $\frac{11.add}{14}$, the ſolid content of the veſſel, be divided by 282, the quotient, to wit, $\frac{11\,add}{3948}$, will be the number of gallons therein contained. Inſtead of 3948 put 3949, which will make no conſiderable difference in ſo great a denominator, and the fraction $\frac{11\,add}{3949}$ (dividing both the numerator and denominator by 11) will be reduced to $\frac{add}{359}$: whence the following canon:

Having taken both the depth, and the diameter of the baſe in inches, multiply the ſquare of the diameter into the depth of the veſſel, and the product divided by 359 *will give the number of gallons required.*

N. B. This ſubſtitution of 3949 inſtead of 3948 corrects about $\frac{7}{10}$ of the error that would otherwiſe have been committed in ſuppoſing the ſquare of the diameter of the baſe to be to its area as 14 to 11.

Problem 7.

354. *To meaſure a fruſtum of a cone, whoſe perpendicular altitude and the diameters of the two baſes are given.*

N. B. By a frustum of a cone I mean a cone having its top cut off by a plane parallel to the base.

Let the isosceles triangle *ABC* (*Fig* 56.) represent the section of a cone made through its *axis AD*, and let *EF* be any line parallel to the base *BC*, cutting *AB* in *E*, *AC* in *F*, and the *axis AD* in *d*; then will the trapezium *BEFC* be the section of a frustum of this cone whose perpendicular altitude is *Dd*. Call *BC*, the diameter of the greater base, g; *EF*, the diameter of the lesser base, l; and *Dd*, the height of the frustum, b: call also *AD*, the unknown altitude of the whole cone, x; and consequently *Ad*, the altitude of the cone to be cut off, $x-b$; and from the similar triangles *ABC*, *AEF* we have this proportion; *AD* is to *Ad* as *BC* is to *EF*, that is, according to our notation, x is to $x-b$ as g to l; whence, by multiplying extremes and means, we have $gx-gb=lx$, and x, or the altitude of the cone, equal to $\frac{gb}{g-l}$. In like manner if from the value of x we subtract b, the altitude of the frustum, we shall find *Ad*, or the height of the cone to be cut off, equal to $\frac{lb}{g-l}$. Now the solid content of every cone is found by multiplying the base into a third part of its altitude; therefore since the base of the cone *ABC* is $\frac{11gg}{14}$, and its altitude $\frac{gb}{g-l}$, its solid content will be $\frac{g^3}{g-l} \times \frac{b}{3} \times \frac{11}{14}$: in like manner the solid content of the cone *AEF* will be $\frac{l^3}{g-l} \times \frac{b}{3} \times \frac{11}{14}$: subtract the latter cone from the former, and there will remain the solid content of the frustum

BEFC

BEFC equal to $\frac{g^3-l^3}{g-l} \times \frac{b}{3} \times \frac{11}{14}$: but the fraction $\frac{g^3-l^3}{g-l}$ may be reduced to an integer by dividing the numerator by the denominator, and the quotient will be $gg+gl+ll$; therefore the ſolid content of the fruſtum *BEFC* will now be expreſſed thus, $\overline{gg+gl+ll} \times \frac{b}{3} \times \frac{11}{14}$. Whence we have the following canon:

Add the ſquares and the rectangle of the two given diameters together; multiply the ſum into a third part of the given altitude, and the product will be the fruſtum of a pyramid of the ſame height having ſquare baſes whoſe ſides are equal to the two diameters given; and as 14 *is to* 11 *ſo will this fruſtum be to the fruſtum ſought.* Q. E. I.

N. B. 1ſt. Since a cone differs nothing from a fruſtum of a cone whoſe leſſer baſe is equal to nothing, if l be made equal to nothing in the foregoing canon, it ought to give the ſolid content of a cone whoſe height is b, and the diameter of whoſe baſe is g: and ſo it will; for then $\overline{gg+gl+ll} \times \frac{b}{3} \times \frac{11}{14}$ becomes $\frac{11gg}{14} \times \frac{b}{3}$.

2dly, Since a cylinder may be conſidered as a fruſtum of a cone whoſe baſes are equal, if l be made equal to g in the foregoing canon, it ought to give the ſolid content of a cylinder whoſe height is b, and the diameter of whoſe baſe is g: and ſo we find it will; for $\overline{gg+gl+ll} \times \frac{b}{3} \times \frac{11}{14}$ in this caſe becomes $3gg \times \frac{b}{3} \times \frac{11}{14} = \frac{11}{14}ggb$.

3dly, If the leſſer baſe of the fruſtum be ſuppoſed to be increaſed till it becomes equal to the greater; and if, on the other hand, the greater baſe be ſuppoſed to be diminiſhed till it becomes equal to that which was the leſſer baſe before, the ſolid content of the fruſtum will be the ſame as at the firſt; and therefore, if the foregoing canon be juſt, it ought not to be altered by changing the quantities g and l one for the other: which is true; for $gg+gl+ll$ by this means only becomes $ll+lg+gg$, which is the ſame quantity.

In ſolving this laſt problem it is taken for granted that every cone is the third part of a cylinder having the ſame baſe and height; which may ſafely be done, ſince *Euclid* has demonſtrated it in the 10th of the twelfth book of the Elements: but becauſe *Euclid*'s doctrine of ſolids is not ſo eaſy to the imaginations of young beginners, I ſhall (in another place) give another demonſtration of this propoſition, independently of any thing that has here been ſaid.

Lemma. (*Fig.* 57.)

355. *Let* ABC *be any curvilinear ſpace comprehended between two ſtraight lines* AB *and* AC *at right angles to each other, and a curve as* BC *concave towards* AB; *and from any two points* D *and* E *in the line* AB *let the lines* DF *and* EG *be drawn parallel to the baſe* AC, *and terminating in the curve at the points* F *and* G, *and compleat the parallelogram* DEGH: *then it is plain that the curvilinear ſpace* DEGF *will be greater than the parallelogram* DEGH. *But what I here propoſe to demonſtrate is, that if the line* EG *be ſuppoſed to move towards* DF *in a poſition always parallel to itſelf, and at laſt to coincide with* DF, *the nearer* EG *approaches to* DF, *the nearer will the ratio of the curvilinear ſpace* DEGF *to the parallelogram* DEGH *approach towards a ratio of equality, and that it will at laſt terminate in a ratio of equality when* EG *coincides with* DF.

For,

For, completing the parallelogram *GHFK*, the parallelogram *DEKF* will be to the parallelogram *DEGH* upon the ſame baſe as *DF* is to *EG*; therefore the curvilinear ſpace *DEGF* will be to the parallelogram *DEGH* in a leſs ratio than that of *DF* to *EG*; that is, though that ſpace be greater than this parallelogram, yet the ratio of the former to the latter is a leſs ratio than that of *DF* to *EG*: but the nearer the line *EG* approaches towards *DF*, the nearer will the ratio of *DF* to *EG* approach towards a ratio of equality, and it will at laſt become a ratio of equality when *EG* coincides with *DF*; therefore *a fortiori*, the ultimate ratio of the curvilinear ſpace *DEGF* to the parallelogram *DEGH* will be a ratio of equality.

Hence it follows, that if we ſuppoſe the line AB *to be divided into a certain number of parts, ſuch as* DE, *and theſe parts to be made the baſes of ſo many inſcribed parallelograms, ſuch as is the parallelogram* DG, *the more there are of theſe parallelograms, the nearer will the ſum of all the curvilinear ſpaces* DEGF, *that is, the whole curvilinear ſpace* ABC, *approach towards the ſum of all the inſcribed parallelograms; and if we ſuppoſe the baſes of theſe parallelograms to be diminiſhed, and ſo their number to be augmented* ad infinitum, *they will make up the whole curvilinear ſpace* ABC; *ſo that the ſpace* ABC *will be to the ſum of all the inſcribed parallelograms ultimately in a ratio of equality.* For, letting aſide the parts infinitely near the point of interſection *B*, which will be of no conſequence in the account, let the parallelogram *DEGH* be that which, of all the reſt, differs moſt from its correſpondent curvilinear ſpace *DEGF*; and the conſequence will be that the curvilinear ſpace *ABC* will be to the ſum of all the inſcribed parallelograms in a leſs ratio than that of the ſpace *DEGF* to the ſpace *DEGH*: but even this ratio becomes at laſt a ratio of equality, when *DE* is infinitely ſmall, by this lemma: whence it follows *a fortiori*, that the ultimate ratio of the curvilinear

vilinear ſpace *ABC* to the ſum of all the inſcribed parallelograms will be a ratio of equality.

I thought myſelf obliged to demonſtrate this propoſition, becauſe I have known it objected, that though the difference between any particular parallelogram and its correſpondent curvilinear ſpace be allowed to be infinitely ſmall when the common baſe is ſo, yet how do we know but that an infinite number of theſe differences may amount to a finite quantity? and if ſo, then the whole curvilinear ſpace cannot be ſaid to be to the ſum of all the inſcribed parallelograms in a ratio of equality. To this I anſwer, that it muſt be the buſineſs of Geometry to determine whether an infinite number of theſe infinitely ſmall differences amount to a finite quantity or not; and by the demonſtration here given it appears that they do not, but that the ſum of all theſe differences actually diminiſhes as their number increaſes, and at laſt comes to nothing when their number is infinite.

A Lemma. (*Fig.* 57.)

356. *Suppoſing the line* AB *ſtill to keep its place, let us imagine the whole ſpace* ABC *to turn round it, ſo as to deſcribe or generate a ſolid whoſe* axis *is* AB, *and the ſemidiameter of whoſe baſe is* AC; *and the inſcribed parallelograms will at the ſame time by their common motion deſcribe ſo many thin cylindric* laminæ, *which, taken all together, will be leſs than the ſolid generated by the ſpace* ABC; *but, the more they are in number, the nearer they will approach to it; and their circular edges will at laſt terminate in the curve ſurface of the ſolid when their number is infinite.*

For, completing the parallelogram *GHFK* as before, the *lamina* generated by the parallelogram *DK* will be to the *lamina* generated by the parallelogram *DG* as the ſquare of *DF* is to the ſquare of *EG*, all circles being as the ſquares of their ſemidiameters; therefore the *lamina* generated by the curvilinear ſpace *DEGF* will be to the *lamina* generated by the parallelogram

lelogram DG in a leſs ratio than that of DF^2 to EG^2: but when D and E coincide, DF will be equal to EG, and the ſquare of DF to the ſquare of EG; therefore, in this caſe, every particular cylindric *lamina* will be the ſame with a correſpondent *lamina* of the ſolid; and *componendo*, all the cylindric *laminæ* will conſtitute the ſolid itſelf. This may alſo be further evident by applying the demonſtration in the laſt lemma to this caſe. Therefore we need not ſcruple to ſuppoſe round ſolids, generated after the ſame manner as this is, to be made up of an infinite number of infinitely thin cylindric *laminæ*: *Nay even the cone itſelf may be conſidered as being ſo conſtituted: for if we ſuppoſe* BC *to be a ſtraight line inſtead of a curve, the reaſoning of the laſt article and this will equally ſucceed; in which caſe, the ſpace* ABC *will be a triangle, and the figure generated a cone.*

If a ſolid be made up of a finite number of priſmatic or cylindric laminæ, *decreaſing in their diameters as they are farther and farther diſtant from the baſe, the ſurface of ſuch a ſolid muſt neceſſarily aſcend by ſteps: but the thinner theſe elementary* laminæ *are (ſuppoſing their thinneſs to be compenſated by a greater number), the narrower and the ſhallower theſe ſteps will be, ſo as to terminate at laſt in a regular ſurface when their number is infinite.*

A Theorem.

357. *All iſoſceles cones of equal heights are as their baſes; that is, the ſolid content of any one iſoſceles cone is to the ſolid content of any other of an equal height, as the baſe of the former cone is to the baſe of the latter.*

Note, that by an iſoſceles cone I mean a cone whoſe baſe is a circle, and whoſe vertex is every where equally diſtant from the circumference of the baſe; and by an iſoſceles pyramid is meant a pyramid having a regular polygon for its baſe, and whoſe vertex is equally diſtant from all the angles of that polygon: laſtly, by iſoſceles

prisms and cylinders are meant such as have equal and regular polygons and circles for their bases, and are so constituted, that a right line joining the centers of their two bases is perpendicular to them.

Let *ABC* (*Fig.* 58.) be a right-angled triangle at *B*, and producing the base *BC* out to *D*, join *AD*; let also the line *EFG* be drawn any where within the triangle parallel to the base *BCD*, so as to cut *AB* in *E*, *AC* in *F*, and *AD* in *G*: then will *EF* be to *BC* as *EG* is to *BD*, since both are as *AE* to *AB* by similar triangles: therefore, if they be taken alternately, *EF* will be to *EG* as *BC* to *BD*, and EF^2 to EG^2 as BC^2 to BD^2. This being allowed, let the triangle *ABD* be supposed to turn round the fixed side *AB*, so as to generate a cone whose *axis* is *AB*; then will the triangle *ABC* generate another cone having the same common altitude *AB*. Let both these cones be considered as constituted of an infinite number of infinitely thin cylindric *laminæ*, and let *EF* represent indifferently the semidiameter of any one of these *laminæ* belonging to the cone *ABC*; then will *EG* be the semidiameter of a correspondent *lamina* belonging to the cone *ABD*; and the *lamina* whose semidiameter is *EF* will be to the *lamina* whose semidiameter is *EG*, having the same thickness, as EF^2 is to EG^2, or (according to what is already demonstrated) as BC^2 is to BD^2; that is, every particular *lamina* of the cone *ABC* will be to a like *lamina* of the cone *ABD* as the base of the former cone is to the base of the latter; therefore *componendo*, the whole cone *ABC* will be to the whole cone *ABD* as the base of the former is to the base of the latter: but the planes *ABC* and *ABD* may be so constituted as to generate any two isosceles cones whatever that have equal heights; therefore if the heights of two isosceles cones be equal, these cones will be to each other as their bases. *Q. E. D.*

A THE-

A THEOREM.

358. *Every iſoſceles pyramid is equal to an iſoſceles cone of an equal baſe and height.*

Let P repreſent any iſoſceles pyramid, and C an iſoſceles cone of an equal baſe and height: I ſay then that the pyramid P will be equal to the cone C.

To demonſtrate this, imagine the pyramid P to have a cone, as c, inſcribed in it, ſo as to touch every ſide of the pyramid in ſo many lines of contact, and imagine the circumſcribing pyramid, and conſequently the inſcribed cone, to be conſtituted of an infinite number of infinitely thin *laminæ*; and every *lamina* of the circumſcribing pyramid will be to a correſpondent *lamina* of the inſcribed cone as the baſe of the pyramid is to the baſe of the cone. For the plane of every *lamina* that conſtitutes the pyramid will be a polygon ſimilar to the baſe, and the plane of every correſpondent *lamina* that conſtitutes the inſcribed cone will be a circle inſcribed in ſuch a polygon: therefore *componendo*, all the *laminæ* conſtituting the pyramid P will be to all thoſe that conſtitute the cone c, that is, the whole pyramid P will be to the whole cone c as the baſe of P is to the baſe of c: but the cone c is to the cone C of an equal height, as the baſe of c is to the baſe of C. Since then P is to c as the baſe of P is to the baſe of c, and c is to C as the baſe of c is to the baſe of C, it follows *ex æquo* that P is to C as the baſe of P is to the baſe of C: but the baſe of P is equal to the baſe of C by the ſuppoſition; therefore the pyramid P is equal to the cone C, having an equal baſe and altitude. *Q. E. D.*

COROLLARY.

Hence it follows, that whether cones be compared with cones, or cones with pyramids, or pyramids with pyramids, all ſuch as have equal heights will be to one another as their baſes. For cones are ſo by the laſt article, and pyramids are equal to cones having equal

baſes and heights by this: I mean iſoſceles pyramids and iſoſceles cones.

Scholium.

As the ſolid content of a priſm or cylinder of a given perpendicular altitude depends upon the quantity, and not upon the figure of the baſe, ſo by the demonſtration of this propoſition it appears, that the ſolid content of an iſoſceles pyramid or cone of a given perpendicular altitude depends upon the quantity, and not upon the figure of the baſe: let the perpendicular altitude and the area of the baſe be the ſame, and the quantity of the ſolid will continue the ſame, whether that baſe be in the form of a triangle, or a ſquare, or a polygon, or a circle. Other pyramids and cones will be conſidered in another place.

A Lemma.

359. *If from the center of any cube ſtraight lines be imagined to be drawn to all its angles, the cube will by this means be diſtinguiſhed into as many equal iſoſceles pyramids as it has ſides, to wit 6, whoſe baſes will be in the ſides of the cube, and whoſe common vertex will be in the center.*

For if from a point above any right-lined plain figure lines be drawn to all its angles, and then the interſtices of theſe lines be imagined to be filled up with triangular planes, the ſolid figure thus incloſed will be a pyramid; therefore, by the lines above deſcribed, the cube will be diſtinguiſhed into as many pyramids as it hath ſides. And that theſe pyramids will be all equal and iſoſceles, is evident: for firſt, their baſes will be all equal from the nature of the cube; and in the next place, their heights will be all equal from the nature of the center, which is ſuppoſed to be equally diſtant from all the ſides of the cube; and laſtly, as this center muſt alſo be equally diſtant from all its angles, it follows that theſe pyramids muſt be all iſoſceles pyramids. *Q. E. D.*

Coroll.

COROLLARY.

Hence every one of these pyramids will be the sixth part of the whole cube.

A THEOREM.

360. *Every isosceles pyramid or cone is a third part of an isosceles prism or cylinder having an equal base, and an equal perpendicular height.*

Let a be the perpendicular altitude of any isosceles pyramid or cone, and let b be the area of its base, both taken according to the directions given in art. 353: imagine also a cube whose side, that is the side of whose square base, is $2a$; then will $4a^2$ be the area of the base, and $8a^3$ the solid content of this cube: and if, from the center of the cube, lines be imagined to be drawn to the four angles of the base, they will be the outlines of an isosceles pyramid whose base is the same with the base of the cube, to wit, $4a^2$, and whose perpendicular altitude is a; whence the solid content of this pyramid will be $\frac{8a^3}{6}$ or $\frac{4a^3}{3}$, by the corollary in the last article: but as this pyramid has the same height a with the pyramid proposed, these two pyramids will be to one another as their bases, by the corollary in the last article but one: hence the solid content of the pyramid proposed will easily be had by saying, as $4a^2$, the base of the pyramid within the cube, is to b the base of the pyramid proposed, so is $\frac{4a^3}{3}$ the solid content of the former, to a fourth, to wit $\frac{ab}{3}$, which will be the solid content of the latter; therefore the solid content of an isosceles pyramid or cone whose base is b, and whose altitude is a, is found to be $\frac{ab}{3}$: but the solid content of an isosceles prism or cylinder having

an

an equal base and height is ab; therefore every isosceles pyramid or cone is a third part of an isosceles prism or cylinder having an equal base and an equal perpendicular altitude. *Q. E. D.*

Corollary 1.

Hence the solid content of an isosceles pyramid or cone is found by multiplying the area of the base into a third part of the perpendicular altitude, or else by multiplying the area of the base into the whole altitude, and then taking a third part of the product.

Corollary 2.

Hence also it follows that all isosceles pyramids and cones upon equal bases are to one another as their heights.

A Lemma.

261. *If a pyramid of any kind be cut by a plane parallel to its base, the quantity of the section, or (which is all one) the quantity of the base of the pyramid cut off, will always be the same, let the figure of the pyramid be what it will, so long as the base and perpendicular altitude of the whole pyramid and the perpendicular altitude of the pyramid cut off continue the same: in which case, the perpendicular distance of the plane of the section from the plane of the base will also be the same.* (See *Fig.* 59.)

Let A be the vertex of the pyramid, and let BC be any one side of the base; let the lines AB and AC be cut by the plane of the section in the points D and E respectively, and let AFG be the perpendicular altitude of the whole pyramid, cutting the plane of the section in F, and the plane of the base in G, both produced if need be; join FD, FE, GB, GC: then since the base of the pyramid cut off will always be similar to the base of the whole pyramid, whereof DE and BC are correspondent sides; and since all similar plain figures are to each other as the squares of their correspondent

respondent sides by the 20th of the sixth book of the Elements, it follows that the base whose side is DE will be to the base whose side is BC as DE^2 to BC^2, that is, by similar triangles, as AD^2 is to AB^2, or as AF^2 is to AG^2. Since then as AG^2 is to AF^2 so is the base of the whole pyramid to the base of the pyramid cut off; so long as the three first continue the same, the last must also continue the same. *Q. E. D.*

Corollary.

Since the number of sides of the pyramid is not concerned in the demonstration of this proposition, which will be equally true, be the number of sides what it will, it must also be true of the cone, which is nothing else but a pyramid of an infinite number of sides, let the shape of the cone be what it will; that is, whether AG *the perpendicular altitude of the cone passes through the center of the base or not.*

A Theorem.

362. *If a prism or cylinder of any kind be described by the motion of a plain figure ascending uniformly in a horizontal position to any given height, the quantity of the solid thus generated will be the same, whether the describing plane ascends directly or obliquely to the same height; and consequently all prisms and cylinders of what kind soever, that have equal bases and equal perpendicular heights, are equal, whether they stand upon those bases erect or reclining.*

For the better conceiving of this, let the describing plane be made, not to ascend all the way, but sometimes to ascend perpendicularly, and sometimes to move laterally or edgeway, and that by turns: then it is plain that the quantity of solid space, or rather the sum of all the solid spaces thus described, will amount to no more than if the describing plane had ascended all the way perpendicularly to the same height. Let the times of those alternate motions

wherein they are performed be diminiſhed and their number be increaſed *ad infinitum*, and they will terminate at laſt in an uniform oblique motion, and the ſolid generated by this motion will be equal to a ſolid generated by a perpendicular motion of the ſame plane to the ſame height. *Q. E. D.*

N. B. What has here been demonſtrated concerning priſms and cylinders, may be further illuſtrated by ſliding a pack of cards, or a pile of halfpence, out of an erect into an oblique poſture; whereby it may eaſily be ſeen, that neither the baſe or the perpendicular altitude, nor the quantity of the ſolid, can be affected by this change of poſture; but the finer, that is the thinner, theſe conſtituent *laminæ* are, the nearer they will repreſent an oblique ſolid.

A Theorem.

363. *All pyramids and cones of what kind ſoever, that have equal baſes and equal perpendicular heights, are equal.*

To evince this, let us imagine two plain figures (whether ſimilar or diſſimilar to each other it matters not) to riſe together from the ſame level, one directly, and the other obliquely, but both in a horizontal poſition, and always upon the ſame level; and let theſe planes be imagined not to retain all along their firſt magnitude (as was ſuppoſed in the laſt article) but to leſſen by degrees as they riſe, ſo as by their motion to deſcribe tapering figures, and at laſt to vaniſh each in a point: then it is eaſy to ſee, that if the tapering figures thus deſcribed be pyramids or cones having equal baſes and equal perpendicular heights, theſe deſcribing planes muſt not only be equal to each other at firſt, and vaniſh at equal heights, but they muſt leſſen ſo together as to be equal to each other at all other equal altitudes whatever: this is evident from the laſt article but one: and therefore the ſolids deſcribed by them muſt neceſſarily be equal. *Q. E. D.*

COROLLARY.

Hence it follows, that whatever we have demonſtrated concerning iſoſceles pyramids, cones, priſms, and cylinders, with reſpect to their proportion one to another, will be equally true of all others, whatever ſhape or poſture they may be in: as, that all pyramids and cones of the ſame height are to each other as their baſes, that all pyramids and cones upon equal baſes are as their heights, and that every pyramid or cone is a third part of a priſm or cylinder having an equal baſe, and an equal perpendicular altitude.

A LEMMA. (*Fig.* 60.)

364. *Let* ABCD *be a ſquare whoſe baſe is* AD, *and whoſe diagonal is* AC; *and upon the center* A, *and with the* radius AB, *deſcribe the quadrant or quarter of a circle* BAD: *draw alſo the line* EFGH *or* EGFH *any where within the ſquare, parallel to the baſe* AD, *cutting the ſide* AB *in* E, *the quadrant* BD *in* F, *the diagonal* AC *in* G, *and the oppoſite ſide* CD *in* H, *and join* AF: *I ſay then that the ſquare of* EF *and the ſquare of* EG *put together will always be equal to the ſquare of* EH.

For the triangles *ABC* and *AEG* are ſimilar, as having one angle at *A* in common, and the angles at *B* and *E* right; therefore *EG* will be to *EA* as *BC* is to *BA*; but *BC* is equal to *BA*, from the nature of a ſquare; therefore *EG* will be equal to *EA*, and EG^2 to EA^2, and EF^2+EG^2 to $EF^2+EA^2=AF^2=AD^2=EH^2$, that is, $EF^2+EG^2=EH^2$. *Q. E. D.*

A THEOREM.

365. *Every ſphere is two thirds of a circumſcribing cylinder, that is, a cylinder that will juſt contain it.*

For ſuppoſing all things as in the laſt article, (ſee *Fig.* 60.) let the ſquare *ABCD* be now ſuppoſed

to

to turn round its fixed ſide *AB*, ſo that the ſquare may generate a cylinder, the quadrant a hemiſphere, and the triangle *ABC* an inverted cone; and let this cylinder, and conſequently the cone and hemiſphere be conſidered as conſiſting of an infinite number of infinitely thin cylindric *laminæ*: then if *EH* repreſents the ſemidiameter of any one of theſe *laminæ* belonging to the cylinder, *EG* will be the ſemidiameter of ſo much of this *lamina* as lies within the cone, and *EF* the ſemidiameter of ſo much as lies within the hemiſphere: and becauſe (by the laſt article) the ſquare of *EF* and the ſquare of *EG* are both together equal to the ſquare of *EH*, it follows from corollary 6 in art. 347, that the two circles, whoſe ſemidiameters are *EF* and *EG*, are both together equal to the circle whoſe ſemidiameter is *EH*; which is as much as to ſay in other words, ſince the line *EH* was taken indifferently, that every particular *lamina* of the cylinder is equal to two correſpondent *laminæ* at the ſame height, whereof one belongs to the cone, and the other to the hemiſphere; therefore *componendo*, the whole cylinder is equal to the cone and the hemiſphere put together: but the cone has been proved already to be a third part of the cylinder, as having the ſame baſe and height, (ſee art. 360); therefore the hemiſphere muſt be the remaining two thirds of it; that is, every hemiſphere is two thirds of a cylinder of the ſame baſe and height.

Let us now imagine two ſuch hemiſpheres, and two ſuch cylinders to be put together in one common baſe, and the two hemiſpheres will conſtitute a ſphere, and the two cylinders a cylinder circumſcribed about that ſphere, and the ſphere will now be two thirds of the circumſcribing cylinder, Q. E. D.

A THE-

A THEOREM.

366. *Every ſphere is equal to a cone or pyramid whoſe baſe is the ſurface of the ſphere and whoſe perpendicular altitude is its ſemidiameter.*

To demonſtrate this, let a body terminated by plain ſides, regular or irregular, be ſo conſtituted as to admit of a ſphere to be inſcribed in it, touching every ſide in ſome point or other, as the cube and an infinite number of other bodies will; and from the center of the inſcribed ſphere imagine lines to be drawn to every angle of the circumſcribing body: then will this body be diſtinguiſhed into as many pyramids as it hath ſides, whoſe baſes will be the ſeveral ſides of the body, whoſe common vertex will be in the center of the ſphere, and whoſe perpendicular heights will be *radii* drawn to the ſeveral points of contact, and conſequently will be equal: for as when a circle is touched by right lines, all *radii* drawn to the ſeveral points of contact will be perpendicular to the reſpective tangent lines; ſo when a ſphere is touched by planes, all *radii* drawn to the ſeveral points of contact will be perpendicular to the reſpective tangent planes.

Let then r be the *radius* of the ſphere, and let a, b, c, d repreſent the quantities or areas of the ſeveral ſides of the circumſcribing body; and the ſolid contents of the pyramids whereof that body is compoſed will be $\frac{ar}{3}$, $\frac{br}{3}$, $\frac{cr}{3}$, $\frac{dr}{3}$, and the ſum of all theſe pyramids, or the ſolid content of the body, will be $\frac{ar+br+cr+dr}{3}$. Let $a+b+c+d=s$, that is, let s be the whole ſurface of the circumſcribing body, and its ſolid content will be $\frac{rs}{3}$: but $\frac{rs}{3}$ is the content of a pyramid whoſe baſe is s, and whoſe perpendicular altitude is r; therefore every body circumſcribed

circumſcribed about a ſphere is equal to a pyramid whoſe baſe is the ſurface of the body, and whoſe perpendicular altitude is the ſemidiameter of the inſcribed ſphere.

Let us now imagine the ſeveral angles of this circumſcribing body to be pared off cloſe by the ſurface of the ſphere, ſo as to create more ſides and more angles, and we ſhall ſtill have a body circumſcribed about the ſphere, though in another ſhape; and therefore the propôrtion already advanced will be as true in relation to this body as to the former: whence it follows, that if we ſuppoſe the angles of the circumſcribing body to be pared off *ad infinitum*, that is, till it differs nothing from the inſcribed ſphere, the propoſition will be as true of the ſphere itſelf as it was before of the body circumſcribed about it, to wit, that every ſphere is equal to a cone or pyramid whoſe baſe is the ſurface of the ſphere, and whoſe perpendicular altitude is its ſemidiameter. *Q. E. D.*

A Theorem.

367. *The ſurface of every ſphere is equal to four great circles of the ſame ſphere.*

Where note, that by a great circle of a ſphere, I mean any circle ariſing from a ſection of a ſphere into two equal hemiſpheres by a plane paſſing through its center, in contradiſtinction to a leſſer circle ariſing from a ſection of a ſphere into unequal parts: or a great circle of a ſphere may be defined to be a circle whoſe diameter is the ſame with that of the ſphere.

Let s be the ſurface of any ſphere, d the diameter and b the area of a great circle of that ſphere; then will b be the baſe of a circumſcribing cylinder, d its altitude, and $b\,d$ its ſolid content; therefore, by the laſt article but one, $\frac{2\,b\,d}{3}$ will be the ſolid content of the ſphere: but by the laſt article, this ſphere is equal to a cone or pyramid whoſe baſe is s the ſurface of

of the ſphere, and whoſe perpendicular altitude is $\frac{d}{2}$ its ſemidiameter, a third part whereof is $\frac{d}{6}$; therefore $\frac{sd}{6}$ will alſo repreſent the ſolid content of the ſphere: whence we have the following equation, to wit, $\frac{sd}{6} = \frac{2bd}{3}$, which being reduced gives $s=4b$: *Q. E. D.*

From the three laſt articles may be deduced the following corollaries:

Corollaries.

368. 1ſt, *As the diameter of a circle is to the circumference, that is, as 7 to 22 nearly, ſo is the ſquare of the diameter of any ſphere to its ſurface.* For ſuppoſing the diameter of a circle to be to the circumference as 1 to c, and putting d for the diameter of any ſphere, cd will be the circumference of a great circle of that ſphere, ſince as 1 is to c, ſo is d to cd; multiply then $\frac{cd}{2}$ the ſemicircumference, into $\frac{d}{2}$ the *radius*, and you will have $\frac{cdd}{4}$ the area of a great circle; therefore four great circles, or the ſurface of the ſphere, will be cdd: but as 1 is to c, ſo is dd to cdd; therefore, *&c.*

2d, Whence it follows, that *The ſurface of every ſphere is equal to the product of the circumference of a great circle multiplied into the diameter of the ſphere.* For, retaining the notation of the laſt article, cdd the ſurface of the ſphere is equal to cd the circumference of a great circle multiplied into d the diameter.

3d, *The ſurface of every ſphere is equal to the convex ſurface of a circumſcribed cylinder.* For if a concave cylinder without its two baſes be ſlit, and then opened into a plane, the figure of that plane will be a paral-

lelogram, whoſe baſe will be that line which before was the circumference of the baſe of the cylinder, and whoſe height will be the ſame with that of the cylinder; therefore, as the area of a parallelogram is found by multiplying the baſe into the height, the ſurface of every cylinder muſt be found by multiplying the circumference of the baſe into the height of the cylinder: but the circumference of a cylinder circumſcribed about a ſphere is equal to the circumference of a great circle of the ſphere, and the height of ſuch a cylinder is equal to the diameter of the ſphere; therefore the convex ſurface of the cylinder will be equal to the circumference of a great circle of the ſphere multiplied into the diameter, which by the laſt corollary is the ſurface of the inſcribed ſphere.

4th, *The ſolid content of every ſphere is equal to the product of its ſurface multiplied into a third part of the* radius, *or the* radius *into a third part of the ſurface.* This is evident from art. 366.

5th, *As ſix times the diameter of a circle is to the circumference, that is, as* 42 *is to* 22 *or* 21 *to* 11 *nearly, ſo is the cube of the diameter of any ſphere to its ſolid content.* For if we ſuppoſe the diameter of a circle to be to the circumference as 1 to c, the ſurface of a ſphere whoſe diameter is d will be cdd by the firſt corollary; and this ſurface multiplied into a third part of the *radius*, or into a third part of $\frac{d}{2}$, which is $\frac{d}{6}$, gives $\frac{cd^3}{6}$ the ſolid content of the ſphere: but as 6 is to c, ſo is d^3 to $\frac{cd^3}{6}$; therefore as ſix times the diameter of a circle is to the circumference ſo is the cube of the diameter of any ſphere to its ſolid content.

6th, *The ſurfaces of all ſpheres are as the ſquares, and the ſolid contents as the cubes, of their diameters or ſemidiameters.* For ſuppoſing the diameter of any circle

circle to be to the circumference as 1 to c, and ſuppoſing d and e to be the diameters of two ſpheres, the ſurfaces will be cd^2 and ce^2 by the firſt corollary, and the ſolid contents will be $\frac{cd^3}{6}$ and $\frac{ce^3}{6}$ by the laſt: but cd^2 is to ce^2 as d^2 is to e^2, or as $\frac{d^2}{4}$ is to $\frac{e^2}{4}$; and $\frac{cd^3}{6}$ is to $\frac{ce^3}{6}$ as d^3 is to e^3, or as $\frac{d^3}{8}$ is to $\frac{e^3}{8}$.

To ſhew the uſe of the properties of the ſphere above deſcribed, I ſhall add the following problems:

PROBLEM I.

369. *To find how many acres the ſurface of the whole earth contains.*

Let the diameter of a circle be to the circumference as d to c, and let e be the circumference of the earth; then will $\frac{de}{c}$ be its diameter, and $\frac{de^2}{c}$ its ſurface by the ſecond corollary in the laſt article. Now the circumference of the earth is 131630573 Engliſh feet, or 24930 Engliſh miles nearly, allowing 5280 feet to a mile: therefore if we make $e=24930$, we ſhall have $e^2=621504900$. Now the numbers 7 and 22 are ſcarce exact enough to expreſs the proportion of the diameter of a circle to the circumference in company with ſo large a number as e^2; let us therefore uſe that of 113 to 355, which we have elſewhere ſhewn (ſchol. 1. in art. 179*) to be much more exact; that is, let $d=113$ and $c=355$, and $\frac{de^2}{c}$ or the ſurface of the earth will be 197831137 ſquare miles: but every ſquare mile contains 640 acres; therefore, if the foregoing number of ſquare miles be multiplied by 640, the product 126611927680 will be the number of acres required.

* See the Quarto Edition, p. 282.

N. B. To be more exact in any computation than the *data* on which it is founded, can be to little or no purpose.

Problem 2.

370. *What must be the diameter of a concave sphere that will just hold an English gallon?*

By the fifth corollary in art. 368, as 11 is to 21, so is the solid content of any sphere to the cube of its diameter: but the solid content of our sphere is 282 cubic inches or an English gallon by the supposition: therefore the cube of its diameter will be $538\frac{4}{11}$, the cube root whereof 8.135 will be the diameter itself.

N. B. The extraction of the cube root is taught in most books of Arithmetic, and depends on the nature of a binomial, as doth the extraction of the square root; and therefore whoever sees the reason of the latter, may (without much difficulty) reason himself into the former: but the extraction of the roots of all simple powers will best be performed by the help of logarithms, as will be shewn hereafter when we come to treat of the nature and properties of those numbers.

Of the Spheroid.

373. *If a sphere be resolved into an infinite number of infinitely thin cylindric* laminæ, *and then these* laminæ, *retaining their circular figure, be all increased or all diminished in the same proportion, they will constitute a figure called a spheroid; and it is said to be prolate or oblong, according as these constituent* laminæ *are increased or diminished.* This a learner, who is unacquainted with the nature of the *ellipsis*, may (if he pleases) take for the definition of a spheroid.

From the definition here given it follows,

1st, that *Every spheroid is to a sphere upon the same* axis, *as any one* lamina *in the former is to a like* lamina *in the latter from whence it was derived; or as any number*

number of laminæ *in the former is to the ſame number of like* laminæ *in the latter, that is, as any portion of the former comprehended between two parallel planes perpendiuclar to its* axis, *is to a like portion of the latter.*

2dly, it follows, that *Every ſpheroid, as well as every ſphere, is two thirds of a circumſcribing cylinder.* For though a ſpheroid be greater or leſs than a ſphere upon the ſame *axis*, the cylinder circumſcribed about the ſpheroid will be proportionably greater or leſs than the cylinder circumſcribed about the ſphere: for, having the ſame length, they will be as their baſes; therefore the ſpheroid will have the ſame proportion to a cylinder circumſcribed about it, as the ſphere hath to a cylinder circumſcribed about the ſphere.

A Lemma.

374. *The chord of any circular arc is a mean proportional between the verſed ſine of that arc and the diameter.*

Let *ABC* (*Fig.* 61.) be a ſemicircle whoſe diameter is *AC*, and aſſuming any arc as *AB*, draw the ſtraight line *AB*, which is its chord; draw alſo *BD* perpendicular to the diameter *AC* in *D*, and the intercepted line *AD* is called the verſed ſine of the arc *AB*. What we are then to demonſtrate is, that the chord *AB* is a mean proportional between the verſed ſine *AD* and the whole diameter *AC*: and this is eaſily done by drawing the other chord *BC*; for then the triangle *ABC* will be right-angled at *B*, as being in a ſemicircle, and conſequently will be ſimilar to the right-angled triangle *ADB*; whence *AD* will be to *AB* as *AB* to *AC*. *Q. E. D.*

Problem 5.

375. *To find the ſolid content of a fruſtum of a hemiſphere or hemiſpheroid comprehended between a great circle perpendicular to its* axis *and any other leſſer circle parallel to it, having theſe two oppoſite baſes and the height of the fruſtum given.*

N. B. As □ *AD* is ſometimes uſed for the ſquare of *AD*, or a ſquare whoſe ſide is *AD*, ſo in our notation in this and ſome of the following articles, we ſhall not ſcruple to uſe ⊙ *AD* for the area of a circle whoſe ſemidiameter is *AD*, 2 ⊙ *AD* for two ſuch circles, &c.

Let *ABCD* (*Fig.* 60,) be a ſquare whoſe baſe is *AD* and diagonal *AC*; and upon the center *A* and with the *radius AB* deſcribe the quadrant *BAD*; draw alſo the line *EFGH* any where within the ſquare parallel to *AD*, cutting *AB* in *E*, the quadrant in *F*, the diagonal in *G*, and the oppoſite ſide *CD* in *H*. This done, imagine the whole figure to turn round its fixed ſide *AB*: then will the ſquare generate a cylinder, the quadrant a hemiſphere, the triangle *ABC* an inverted cone, and the curvilinear ſpace *AEFD* ſuch a fruſtum of an hemiſphere as we are to find the ſolid content of, having given *AD* and *EF* the ſemidiameters of the two oppoſite baſes, and *AE* the height of the fruſtum.

In the 365th article, by the help of this conſtruction, it was demonſtrated, that the hemiſphere generated by the quadrant *ABD* and the cone generated by the triangle *ABC* were together equal to the cylinder generated by the ſquare *ABCD*; and the reaſons there given for ſuch an equality, equally prove that the fruſtum generated by the ſpace *AEFD* and the cone generated by the triangle *AEG* will both together be equal to the cylinder generated by the parallelogram *AEHD*: but the cone generated by the triangle *AEG* is equal to $\odot EG \times \frac{AE}{3}$; and the cylinder generated by the parallelogram *AEHD* is equal to $\odot AD \times AE = 3 \odot AD \times \frac{AE}{3} = \overline{2 \odot AD + \odot EH} \times \frac{AE}{3}$, therefore, if *f* be put for the ſolid content of the fruſtum, we ſhall have the following equation,

f +

$f + \odot EG \times \frac{AE}{3} = \overline{2 \odot AD + \odot EH} \times \frac{AE}{3}$; tranſpoſe $\odot EG \times \frac{AE}{3}$, and then we ſhall have $f = \overline{2 \odot AD + \odot EH - \odot EG} \times \frac{AE}{3}$: but by the 364th article, and the ſixth corollary in the 347th, $\odot EH = \odot EF + \odot EG$; therefore $\odot EH - \odot EG = \odot EF$: ſubſtitute $\odot EF$ inſtead of $\odot EH - \odot EG$ in the foregoing equation $\left(f = \overline{2 \odot AD + \odot EH - \odot EG} \times \frac{AE}{3}\right)$ and you will have $f = \overline{2 \odot AD + \odot EF} \times \frac{AE}{3}$: this is upon a ſuppoſition that the ſolid propoſed is a fruſtum of a hemiſphere. Let us now ſuppoſe the ſolid f to conſiſt of an infinite number of infinitely thin cylindric *laminæ* parallel to its baſe, and then that theſe *laminæ*, retaining their circular figure, be all diminiſhed in ſome given proportion, ſuppoſe in the proportion of r to s; then it is plain that the ſolid f will degenerate into a fruſtum of an hemiſpheroid, and that it will be diminiſhed in the proportion of r to s; but then the quantity $\overline{2 \odot AD + \odot EF} \times \frac{AE}{3}$ will alſo be diminiſhed in the ſame proportion; and therefore f will ſtill be equal to $\overline{2 \odot AD + \odot EF} \times \frac{AE}{3}$; whence we have the following theorem for finding the ſolid content of the fruſtum propoſed, whether it be a fruſtum of a hemiſphere or hemiſpheroid.

To twice the area of the greater baſe add the area of the leſs; multiply the ſum by a third part of the altitude of the fruſtum, and the product will be its ſolid content. Q. E. I.

PROBLEM 6.

376. *To find the convex ſurface of any ſegment of a ſphere whoſe baſe and height are given.* (Fig. 60.)

Retaining the conſtruction of the laſt article, and ſuppoſing what was there proved, if from the hemiſphere generated by the ſpace *ABD* be ſubtracted the fruſtum generated by the ſpace *AEFD*, there will remain a ſegment of the ſphere generated by the ſpace *BEF*; and if to this ſegment again be added the cone generated by the triangle *AEF*, they will both together conſtitute a ſector of the ſphere generated by the ſpace *ABF*; and laſtly, if the ſolid content of this ſpherical ſector be applied to, or divided by a third part of the *radius AD*, the plane or quotient thence ariſing will be equal to the convex ſurface generated by the arc *BF*, which is here propoſed to be determined. For as every ſphere is equal to a cone whoſe baſe is its ſurface and whoſe altitude is its *radius*, (ſee art. 366) ſo (and for the ſame reaſon) muſt every ſector of a ſphere be equal to a cone whoſe baſe is the ſpherical part of its ſurface, and whoſe altitude is the *radius*. Now the hemiſphere generated by the ſpace *ABD* being two thirds of a cylinder of the ſame baſe and height, as was demonſtrated in art. 365, its ſolid content will be expreſſed by $2\odot AD\times\frac{AB}{3}=2\odot AD\times\frac{AE}{3}+2\odot AD\times\frac{EB}{3}$; and the ſolid content of the fruſtum generated by the ſpace *AEFD* was $2\odot AD\times\frac{AE}{3}+\odot EF\times\frac{AE}{3}$; ſubtract the latter from the former, and there will remain the ſegment generated by the ſpace *BEF* equal to $2\odot AD\times\frac{EB}{3}-\odot EF\times\frac{AE}{3}$; add to this the cone generated by the triangle *AEF*, whoſe content is $\odot EF\times\frac{AE}{3}$, and you will have the ſpherical ſector generated by the

ſpace

ſpace ABF equal to $2 \odot AD \times \frac{EB}{3}$. Let the diameter of a circle be to the circumference as 1 to c, and $2AD \times c$ will be the circumference of a great circle, whoſe half $AD \times c$ multiplied into AD the *radius*, will give $AD^2 \times c$ for the area of a great circle; therefore $\odot AD = AD^2 \times c$, and $2 \odot AD \times \frac{EB}{3}$, or the content of the ſector, will be $2AD^2 \times c \times \frac{EB}{3}$: but EB is the verſed ſine of the arc BF; and therefore if we put l for the chord of that arc, we ſhall have $2AD \times EB = l^2$ by the laſt article but one; and the ſolid content of the ſector will now be $l^2 \times c \times \frac{AD}{3}$; divide by $\frac{AD}{3}$, and you will have the ſurface generated by the arc BF equal to $l^2 \times c$: but as $AD^2 \times c$ was equal to $\odot AD$, ſo will $l^2 \times c$ be equal to $\odot l$, that is, to a circle whoſe *radius* is the chord of the arc BF: therefore *the ſurface of every ſegment of a ſphere is equal to a circle whoſe* radius *is the diſtance of the pole, or vertical point of the ſegment, from the circumference of its baſe.*

What has here been determined concerning the convex ſurface of a ſegment of a ſphere agrees entirely with what was determined in art. 367 concerning the ſurface of a whole ſphere. For if we ſuppoſe the arc BF to be a ſemicircle, its chord will then be a diameter, and the ſurface generated by this arc will be the ſurface of the whole ſphere; and therefore the ſurface of this ſphere will be equal to a circle whoſe *radius* is the diameter of the ſphere, that is $2AD$: but a circle whoſe *radius* is $2AD$, is quadruple of a circle whoſe *radius* is AD, becauſe all circles are as the ſquares of their ſemidiameters; therefore the ſurface of every ſphere is equal to four great circles of the ſame, as was there demonſtrated.

THE

THE ELEMENTS of ALGEBRA.

BOOK IX. PART I.

Of powers and their indexes.

378. THE indexes of powers have been already conſidered, ſo far as they ſerve for a ſort of ſhort-hand writing in Algebra: but the incomparable *Newton* has very much enlarged our views with reſpect to theſe indexes or exponents, inſomuch that it is by their means chiefly, that ſo many excellent, uſeful, and comprehenſive theorems have been diſcovered both in Algebra and Geometry, and more particularly in the doctrine of Fluxions. This ſort of notation therefore I ſhall now endeavour further to explain in my obſervations upon the following ſmall table:

Powers without their indexes.

$xxxxx.\quad xxxx.\quad xxx.\quad xx.\quad x.\quad 1.\quad \frac{1}{x}.\quad \frac{1}{xx}.\quad \frac{1}{xxx},$

$$\frac{1}{xxxx}.\quad \frac{1}{xxxxx}.$$

Powers with their indexes.

$x^5.\quad x^4.\quad x^3.\quad x^2.\quad x^1.\quad x^0,\quad x^{-1}.\quad x^{-\frac{1}{2}}.\quad x^{-3}.$

$x^{-4}.\quad x^{-5}.$

This table conſiſts of two rows, whereof the upper is a ſeries of powers expreſſed without their indexes, the common root or fundamental quantity being x; the lower expreſſes the ſame powers by the help of their indexes.

OBSER-

OBSERVATIONS.

379. 1ſt, *By this table it appears that every ſubſequent power is the quotient of the next before it divided by the common root* x, *and that every ſubſequent index is generated by ſubtracting unity from the next before it.* Thus x^2 divided by x gives x, x divided by x gives 1, 1 divided by x gives $\frac{1}{x}$, $\frac{1}{x}$ divided by x gives $\frac{1}{xx}$, *&c.*: thus again, $2-1=1$, $1-1=0$, $0-1=-1$, $-1-1=-2$ *&c.* Since then each row exhibits a regular ſeries, it follows that the negative indexes have the ſame right to expreſs the powers they belong to as the affirmative ones, and that x^{-2} repreſents $\frac{1}{xx}$ upon the ſame foundation that x^2 repreſents xx.

2dly, *Therefore whatever number is the index of any power, its negative will be the index of the reciprocal of that power, or of unity divided by that power.* Thus if 2 be the index of xx, -2 will be the index of $\frac{1}{xx}$; if 1 be the index of x, -1 will be the index of $\frac{1}{x}$; and ſo of the reſt.

3dly, *In all caſes whatever, the addition of indexes anſwers to the multiplication of the powers to which they belong; that is, if any two powers of the ſame quantity be multiplied together, the index of the multiplicator added to the index of the multiplicand will give the index of the product.* Thus x^2 multiplied into x^3 gives x^5, as $xx \times xxx$ gives $xxxxx$: thus $x^2 \times x^{-3}$ gives x^{-1}, as $xx \times \frac{1}{xxx}$ gives $\frac{1}{x}$: thus $x^{-2} \times x^{-3}$ gives x^{-5}, as $\frac{1}{xx} \times \frac{1}{xxx}$ gives $\frac{1}{xxxxx}$: thus $x^2 \times x^{-2}$ gives x^0, as $xx \times \frac{1}{xx}$ gives 1: $x^3 \times x^0$ gives x^3, as $xxx \times 1$ gives xxx.

4thly,

4thly, *In like manner the ſubtraction of indexes anſwers to the diviſion of powers; that is, if any power of any quantity be divided by a power of the ſame quantity, the index of the diviſor ſubtracted from the index of the dividend leaves the index of the quotient.* Thus x^3 divided by x^2 quotes x^1, as xxx divided by xx quotes x: thus x^2 divided by x^{-3} quotes x^5, as xx divided by $\frac{1}{xxx}$ quotes $xxxxx$: thus x^{-2} divided by x^3 quotes x^{-5}, as $\frac{1}{xx}$ divided by xxx quotes $\frac{1}{xxxxx}$: thus x^{-2} divided by x^{-3} gives x^1, as $\frac{1}{xx}$ divided by $\frac{1}{xxx}$ gives x: thus x^0 divided by x^{-2} gives x^2, as 1 divided by $\frac{1}{xx}$ gives xx: laſtly, x^2 divided by x^2 gives x^0, as xx divided by xx gives 1.

5thly, *If the index of any power be multiplied by* 2, 3, 4, &c. *the product will be the index of the ſquare, cube, ſquare-ſquare,* &c. *of that power: and therefore if the index of any power be divided by* 2, 3, 4, &c. *the quotient will be the index of the ſquare root, cube root, ſquare-ſquare root,* &c. *of that power.* Thus the ſquare of x^2 is x^4, its cube x^6, its ſquare-ſquare x^8: thus again, the ſquare root of x^{12} is x^6, its cube root x^4: its ſquare-ſquare root x^3, *&c.*: thus the ſquare root of x or x^1 is $x^{\frac{1}{2}}$, its cube root $x^{\frac{1}{3}}$, its ſquare-ſquare root $x^{\frac{1}{4}}$ *&c.*: thus the ſquare root of $\frac{1}{x}$ or x^{-1} is $x^{-\frac{1}{2}}$, its cube root $x^{-\frac{1}{3}}$, its ſquare-ſquare root $x^{-\frac{1}{4}}$ *&c.*: thus $x^{\frac{2}{3}}$ ſignifies the cube root of x^2, $x^{\frac{3}{4}}$ the ſquare-ſquare root of x^3. And univerſally, $x^{\frac{m}{n}}$ ſignifies that root of x^m whoſe index is n; as if $y^n=x^m$, then y is ſaid to be that root of x^m whoſe index

index is n, and muſt be expreſſed by $x^{\frac{m}{n}}$; and therefore if in any caſe $x^m = y^n$, it will be a good inference to ſay that y is equal to $x^{\frac{m}{n}}$, or that x is equal to $y^{\frac{n}{m}}$.

6thly, *Powers are reducible to more ſimple powers, as often as their fractional indexes are reducible to more ſimple fractions.* Thus the ſquare-ſquare root of x^2 is the ſame with the ſquare root of x, becauſe $x^{\frac{2}{4}} = x^{\frac{1}{2}}$.

7thly, *If the index of any power be an improper fraction, and that fraction be reduced into a whole number and a fraction, the power will hereby be reſolved into two factors, whereof one will have the whole number for its index, and the other the fractional part.* Thus $\frac{5}{2} = 2 + \frac{1}{2}$, and therefore $x^{\frac{5}{2}} = x^2 \times x^{\frac{1}{2}}$; that is, the ſquare root of x^5 is equal to xx multiplied into the ſquare root of x.

8thly, *Surd powers may be reduced to the ſame root by a reduction of their fractional indexes to the ſame denomination, and that, whether they be powers of the ſame quantity or not.* Thus $x^{\frac{1}{2}}$ and $y^{\frac{1}{3}}$ are the ſame as $x^{\frac{3}{6}}$ and $y^{\frac{2}{6}}$; that is, the ſquare root of x and the cube root of y are the ſame as the ſixth root of x^3 and the ſixth root of y^2, and thus may ſurds of different roots be compared together without any extraction of thoſe roots. As for inſtance, if any one ſhould aſk me, which of theſe two quantities is the greater, the ſquare root of 2, or the cube root of 3? I ſhould anſwer, the cube root of 3; for the ſquare root of 2 or $2^{\frac{1}{2}}$ or $2^{\frac{3}{6}}$ is equal to $8^{\frac{1}{6}}$; but the cube root of 3, or $3^{\frac{1}{3}}$, or $3^{\frac{2}{6}}$, is equal to $9^{\frac{1}{6}}$; and $9^{\frac{1}{6}}$ is greater than $8^{\frac{1}{6}}$.

9thly,

9thly, *That the addition and ſubtraction of indexes anſwers to the multiplication and diviſion of the powers to which they belong, holds equally true in fractional indexes, as in integral ones.* Thus $\frac{1}{2}+\frac{1}{3}=\frac{5}{6}$, and $x^{\frac{1}{2}} \times x^{\frac{1}{3}} = x^{\frac{5}{6}}$, which I thus demonſtrate. Let $y^6=x$; then by the fifth obſervation we ſhall have $y = x^{\frac{1}{6}}$, $y^3 = x^{\frac{3}{6}}$, or $x^{\frac{1}{2}}$, $y^2 = x^{\frac{2}{6}}$, or $x^{\frac{1}{3}}$, and $y^5 = x^{\frac{5}{6}}$: but $y^3 \times y^2$ is equal to y^5 by the third obſervation; therefore $x^{\frac{1}{2}}$ multiplied into $x^{\frac{1}{3}}$ gives $x^{\frac{5}{6}}$. After the ſame manner, ſince $\frac{1}{2}-\frac{1}{3}=\frac{1}{6}$, it may be demonſtrated that $x^{\frac{1}{2}}$ divided by $x^{\frac{1}{3}}$ will give $x^{\frac{1}{6}}$; for y^3 divided by y^2 gives y, which is equal to $x^{\frac{1}{6}}$; and the demonſtrations will be the ſame in all other caſes.

PART II.

Of logarithms, and their uſes.

The definition of logarithms, and conſectaries drawn from it.

Art. 390. LOGARITHMS *are a ſet of artificial numbers placed over-againſt the natural ones, uſually from* 1 *to* 100000, *and ſo contrived that their addition anſwers to the multiplication of the natural numbers to which they belong; that is, if any two numbers be multiplied together, and ſo produce a third, their logarithms being added together will conſtitute the logarithm of that third.*

Thus 0 .3010300, the common logarithm of 2, added to

0 .4771213, the logarithm of 3, gives

0 .7781513, the logarithm of 6, becauſe 6 is the product of 2 and 3 multiplied together.

From this definition it follows, firſt, *That in any ſyſtem or table of logarithms whatever, the logarithm of unity or* 1 *will be nothing:* for as 1 neither increaſes nor diminiſhes the number multiplied by it, ſo neither will its logarithm either increaſe or diminiſh the logarithm to which it is added; and therefore the logarithm of 1 muſt be nothing.

2dly, *For a like reaſon, the logarithm of a proper fraction will always be negative:* for ſuch a fraction always diminiſhes the number multiplied by it, and therefore its logarithm will always diminiſh the logarithm to which it is added.

3dly, *This property of logarithms, whereby they are defined as above, affords us no ſmall compendium in multiplication:* for whenever one number is to be multiplied by another, it is but taking out their logarithms, and adding them together, and their ſum will be a third logarithm whoſe natural number being taken out of the tables will be the product required.

4thly, *The ſubtraction of logarithms anſwers to the diviſion of the natural numbers to which they belong*; that is, whenever one number is to be divided by another, it is but ſubtracting the logarithm of the diviſor from the logarithm of the dividend, and the remainder will be the logarithm of the quotient: and thus by the help of logarithms may the operation of diviſion be performed by mere ſubtraction as that of multiplication was by addition. *Hence as every fraction is nothing elſe but the quotient of the numerator divided by the denominator, its logarithm will be found by ſubtracting the logarithm of the denominator from the logarithm of the numerator.* To demonſtrate this, to wit, that the logarithm of the diviſor ſubtracted from the logarithm of the dividend will leave the logarithm of the quotient, let the number A be divided by the number B, and let the quotient be the number C, and let the logarithms of the numbers A, B, and C, be a, b, and c reſpectively; I ſay then that $a-b$ will be equal to c: for ſince by the ſuppoſition

ſition $\frac{A}{B}=C$, we ſhall have $A=BC$, $a=b+c$ by the definition; whence $a-b=c$.

5thly, *As every fourth proportional is found by multiplying the ſecond and third numbers together, and dividing the product by the firſt, ſo the logarithm of every ſuch fourth proportional will be found by adding the logarithms of the ſecond and third numbers together, and ſubtracting from the ſum the logarithm of the firſt.* This renders all operations by the rule of proportion very compendious and eaſy; eſpecially after the practitioner has pretty well inured himſelf to take out of the table logarithms to his numbers, and numbers to his logarithms: but this compendium is chiefly uſeful in Trigonometry, both plain and ſpherical, where every thing he wants is put down ready to his hands.

6thly, *If* A *be any number whoſe logarithm is* a, *then the logarithm of* A^2 *will be* 2a, *that of* A^3, 3a, *&c. that of* $\frac{1}{A}$, $-a$, *that of* $\frac{1}{A^2}$, $-2a$, *&c. And univerſally, the logarithm of* A^m *will be* $a \times m$, *and that, whether the index* m *be integral or fractional, affirmative or negative: on the other hand, if* q *be the logarithm of any power of* A, *as of* A^m, *then* $\frac{q}{m}$ *will be the logarithm of* A. The reaſon of all this is plain; for as A^2 is the product of A multiplied into itſelf, ſo its logarithm will be the logarithm of A added to itſelf or doubled, that is $2a$; and ſo of the higher powers. Again, as $\frac{1}{A}$ is the quotient of unity divided by A, its logarithm will be found by ſubtracting a, the logarithm of A, from 0, the logarithm of 1, which gives $-a$; and ſo of the lower powers. Laſtly, as $\sqrt{A}$, when multiplied into itſelf, produces A, ſo its logarithm, when added to itſelf, ought to make a; therefore the logarithm of $\sqrt{A}$ will be $\frac{1}{2}a$; and ſo of all the other fractional powers. Here then again

we have another inſtance of the very great uſefulneſs of a good table of logarithms, to wit, in raiſing a number to any given power, or in extracting any given root out of it, all which is performed with equal facility, only by multiplying its logarithm by the index of the given power, or dividing it by the index of the given root; as doubling it for the ſquare, tripling it for the cube, *&c.*; halving it for the ſquare root, trifecting it for the cube root *&c.*: this, I ſay, cannot but be very uſeful in a great many caſes, and more eſpecially in Annatociſm, where we have ſometimes occaſion to extract even the three hundred ſixty-fifth root of a number, as at other times to raiſe it to the three hundred ſixty-fifth power, ſcarce poſſible to be performed any other way; to ſay nothing of the innumerable miſtakes that in ſo long and laborious a calculation would be almoſt unavoidable, all which are prevented by the uſe of logarithms. It cannot indeed be expected that entire powers, and much leſs entire roots, ſhould be gained this way; but it will be eaſy in moſt caſes to obtain as many terms as can be of any uſe to us.

7thly, *If any ſet of numbers, as* A, B, C, D *be in continual geometrical proportion, their logarithms, which we ſhall call* a, b, c, d, *will be in arithmetical progreſſion:* for ſince by the ſuppoſition A is to B as B is to C as C is to D, that is, ſince $\frac{B}{A}=\frac{C}{B}=\frac{D}{C}$, we ſhall have $b-a=c-b=d-c$ by the fourth conſectary; therefore a, b, c, d are in arithmetical progreſſion. *Q. E. D.*

8thly, *From this laſt conſectary it will be eaſy, having two numbers given, to find as many mean proportionals as we pleaſe between them.* Let the given numbers be A and F, and let it be required to find four mean proportionals between them, which we ſhall call B, C, D, E, ſo that A, B, C, D, E, F, may be in continual geometrical proportion. Here then it is evident from the laſt conſectary, that, as theſe num-

bers are in continual geometrical proportion, their logarithms, which we ſhall call a, b, c, d, e, f, will be in arithmetical progreſſion, whereof the extremes a and f are known, as being the logarithms of the known numbers A and F, and the intermediates may be found thus. Put x for the common difference of this arithmetic progreſſion; then will $a+x=b$, $a+2x=c$, $a+3x=d$, $a+4x=e$, $a+5x=f$; whence $x=\frac{f-a}{5}$; whence $a+x$ or $b=a+\frac{f-a}{5}=\frac{4a+f}{5}$, $a+2x$ or $c=\frac{3a+2f}{5}$, $a+3x$ or $d=\frac{2a+3f}{5}$, $a+4x$ or $e=\frac{a+4f}{5}$; ſo that the logarithms of the four mean proportionals ſought are $\frac{4a+f}{5}$, $\frac{3a+2f}{5}$, $\frac{2a+3f}{5}$, $\frac{a+4f}{5}$: take then the natural numbers B, C, D, E of theſe logarithms, and they will be the mean proportionals required. *Q. E. I.*

Logarithms the meaſures of ratios.

391. *Logarithms are ſo called from their being the arithmetical or numeral exponents of ratios:* for if unity be made the common conſequent of all ratios, or the common ſtandard to which all other numbers are to be referred, then every logarithm will be the numeral exponent of the ratio of its natural number to unity. As for inſtance, the ratio of 81 to 1 actually contains within itſelf theſe four ratios, to wit, the ratio of 81 to 27, that of 27 to 9, that of 9 to 3, and that of 3 to 1 (ſee art. 293); all which ratios are equal to one another, and to the ratio of 3 to 1; therefore the ratio of 81 to 1 is ſaid to be four times as big as the ratio of 3 to 1 (ſee art. 294): and hence it is that the logarithm of 81 is four times as big as the logarithm of 3. Again, the ratio of 24 to 1 contains, and may be reſolved into theſe three

ratios, to wit, the ratio of 24 to 12, that of 12 to 4, and that of 4 to 1; the firſt of theſe ratios, to wit, the ratio of 24 to 12, is the ſame with that of 2 to 1; the ſecond, to wit, the ratio of 12 to 4, is the ſame with that of 3 to 1; and therefore the ratio of 24 to 1 is equal to the ratios of 2 to 1, 3 to 1, and 4 to 1, put together; and hence it is that the logarithm of 24 is equal to the logarithms of 2, 3 and 4 put together: *And univerſally, the magnitude of the ratio of* A *to* 1 *is to the magnitude of the ratio of* B *to* 1 *as the logarithm of* A *is to the logarithm of* B. *And hence we have a way of meaſuring all ratios whatever, let their conſequents be what they will:* as for example, the ratio of *A* to *B* is the exceſs of the ratio of *A* to 1 above the ratio of *B* to 1 (ſee art. 296); therefore the numeral exponent of the ratio of *A* to *B* will be the exceſs of the numeral exponent of the ratio of *A* to 1 above the numeral exponent of the ratio of *B* to 1, that is, the exceſs of the logarithm of *A* above the logarithm of *B*; therefore *The magnitude of the ratio of* A *to* B *is to the magnitude of the ratio of* C *to* D *as the exceſs of the logarithm of* A *above the logarithm of* B, *which is the meaſure of the former ratio, is to the exceſs of the logarithm of* C *above the logarithm of* D, *which is the meaſure of the latter ratio:* and thus we ſee that logarithms are as true and as proper meaſures of ratios as circular arcs are of angles.

I might have defined logarithms from the idea here given of them, and thence have deduced all the other properties above deſcribed: but, as it is not every one that hath a juſt and diſtinct notion of the nature and compoſition of ratios, I thought it more adviſeable to treat of them in a way more familiar to the learner.

Of Briggs's *Logarithms.*

392. *From the definition given in art.* 390, *it may eaſily be ſeen, that, if any one ſyſtem of logarithms be once obtained, an infinite number of others may be derived*

from them by increaſing or diminiſhing the logarithms of that ſyſtem in ſome given proportion. As for inſtance, in the ſyſtem given let a, b, c, be the logarithms of three numbers, A, B, and C, whereof the third is the product of the other two multiplied together; then will $a+b=c$, by the definition. Let us now imagine all the logarithms of this given ſyſtem to be doubled; then will a, b, and c be changed into $2a$, $2b$ and $2c$; but as $a+b$ was equal to c in the former ſyſtem, ſo now will $2a+2b$ be equal to $2c$ in the latter; that is, all the numbers of this new ſyſtem will ſtill retain the property of logarithms. *But though all theſe different ſyſtems be equally perfect, if computed to the ſame degree of accuracy, yet they will not all be equally convenient for uſe: for of all ſyſtems or tables of logarithms, that is certainly beſt accommodated for practice which is now in uſe, and is commonly known by the name of* Briggs's *logarithms.* The Lord *Napeir*, a Scotch nobleman, was the firſt inventor of logarithms; but our countryman Mr. *Briggs*, Profeſſor of Geometry in *Greſham* College, was undoubtedly the firſt who thought of this ſyſtem; and, propoſing it to the noble inventor the Lord *Napeir*, he afterwards publiſhed it with that Lord's conſent and approbation.

The diſtinguiſhing mark of this ſyſtem is, that herein the logarithm of 10 *is* 1, *and conſequently that of* 100, 2, *that of* 1000, 3, *that of* 10000, 4, &c.; *that of* 1, 0, *that of* $\frac{1}{10}$ *or of* 0.1, —1. *that of* $\frac{1}{100}$ *or of* 0.01, —2, &c. *In this ſyſtem the integral parts of the logarithms are always diſtinguiſhed from the reſt, and called the indexes or characteriſtics of the logarithms whereof they are parts:* thus the logarithm of 20 is 1.3010300, where the characteriſtic is 1; that of 2 is 0.3010300, where the characteriſtic is 0; that of $\frac{2}{10}$ or 0.2 is —1+.3010300, where—1 is the characteriſtic, &c.

Some

Some advantages of this ſyſtem.

393. Some of the chief advantages of this ſyſtem, beyond all others, will appear from the following conſiderations.

1ſt, Whereas we have frequent occaſion to multiply and divide by 10, 100, 1000, *&c.* this in this ſyſtem is very readily performed, only by adding to or ſubtracting from the characteriſtic the numbers 1, 2, 3, *&c.*; and as theſe are whole numbers, they can only influence the index or characteriſtic of a logarithm, without affecting the decimal part.

2dly, So long as the digits that compoſe any number are the ſame, and in the ſame order, whatever be their places with reſpect to the place of units, the decimal parts of the logarithm of ſuch a number will always be the ſame. As for inſtance, let $4+l$ be the logarithm of this number 34567 .89, where 4 is the characteriſtic, and l repreſents the ſum of all the decimal parts; then will $5+l$ be the logarithm of 345678 .9, $6+l$ that of 3456789, $7+l$ that of 34567890, *&c.* On the other hand, $3+l$ will be the logarithm of 3456 .789, $2+l$ that of 345 .6789, $1+l$ that of 34 .56789, $0+l$ that of 3 .456789, $-1+l$ that of 0.3456789, $-2+l$ that of 0.03456789, *&c.*: the reaſon of this is plain; for if the number 34567 .89 be multiplied by 10, the product will be 345678 .9; therefore if to $4+l$, the logarithm of the former number be added 1, the logarithm of 10, the ſum $5+l$ will be the logarithm of the latter. Again, if the number 34567 .89 be divided by 10, the quotient will be 3456 .789; therefore if from $4+l$, the logarithm of the former number be ſubtracted 1, the logarithm of 10, the remainder $3+l$ will be the logarithm of the latter. Here then we ſee the reaſon why in *Briggs's* tables the decimal part of every logarithm is affirmative, whether the whole logarithm taken together be ſo or not; for, in the logarithm of all numbers greater than unity, both

the integral and decimal parts are affirmative; and therefore the decimal parts muſt always be ſo, ſince theſe are not changed by changing the natural number, ſo long as the digits that compoſe it are the ſame, and in the ſame order: thus $\frac{-3}{10}$ or —. 3 may be a logarithm; but it is never expreſſed ſo, but rather thus, —1 + .7, the negation being thrown wholly upon the characteriſtic.

3dly, By this means in *Briggs's* ſyſtem the characteriſtic of the logarithm of any number is eaſily known thus: ſuppoſe I was aſked, what is the characteriſtic of the logarithm of this number 34567 .89? Here I conſider that this number lies between 10000 and 100000; therefore its logarithm muſt be ſome number between 4 and 5; therefore it muſt be 4 with ſome decimal parts annexed, that is, the characteriſtic muſt be 4. And again, ſuppoſe it was required to aſſign the characteriſtic of the logarithm of this number, 0 .03456789: here I conſider that this number lies between $\frac{1}{10}$ and $\frac{1}{100}$, that is, between 0 .1 and 0 .01, and therefore its logarithm muſt lie between —1 and —2, that is, its logarithm muſt be —2 with ſome affirmative decimal parts annexed, to leſſen the negation; therefore the characteriſtic will be —2.

To find the characteriſtic of Briggs's *logarithm of any number.*

394. Hence may be drawn a ſhort and eaſy rule for determining the index or characteriſtic of the logarithm of any number given, thus. *If the number given be a whole number, or a mixt number conſiſting of integral and decimal parts, then ſo many removes as is the place of units to the right hand of the firſt figure, of ſo many units will the characteriſtic conſiſt; but if the number propoſed be a pure decimal, then ſo*

many

many removes as is the place of units to the left hand of the firſt ſignificant figure, of ſo many negative units will the characteriſtic conſiſt. Thus the index or characteriſtic of the logarithm of this number 34567 .89 is 4, becauſe 7 in the place of units is four removes to the right hand of the firſt figure 3: thus again, the characteriſtic of the logarithm of this number 0 .03456789 is —2, becauſe 0 in the place of units is two removes to the left hand of the firſt ſignificant figure 3.

Theſe rules are the more to be obſerved, becauſe in ſome tables the integral parts of all logarithms are omited, being left to be ſupplied by the operator himſelf, as occaſion requires: by this means, the logarithms become of much more general uſe than if, by having their characteriſtics prefixed, they were tied down to particular numbers.

Another idea of Logarithms.

395. *In the ſyſtem here deſcribed, every natural number is, or may be, conſidered as ſome power of* 10, *and its logarithm as the index of that power:* for let a be the logarithm of any natural number as A; then ſince *Briggs's* logarithm of 10 is 1, his logarithm of 10^a will be a; this is evident from art. 390 conſect. 6; therefore A muſt be equal to 10^a, ſince they have both the ſame logarithm; that is, the natural number A is ſuch a power of 10 as is expreſſed by its logarithm a. This conſideration gives us a new idea of logarithms, and to one acquainted with the nature of powers and their indexes, it will be no wonder that the addition, ſubtraction, multiplication, and diviſion, of theſe logarithms anſwer to the multiplication, diviſion, involution and evolution of their natural numbers.

Precautions to be uſed in working by Briggs's *logarithms.*

396. Though theſe logarithms (as I obſerved before) are preferable to all others, on account of their ſimplicity

ſimplicity and facility in practice, yet in uſing them ſome precautions are to be obſerved, which (to prevent miſtakes) I ſhall here juſt point out to the learner; as

1ſt, *In the addition of logarithms, whatever is carried over from the decimal to the integral parts muſt be conſidered as affirmative, and as ſuch muſt be added to thoſe integral parts, whether they be affirmative or negative.* Thus $-3+.7000000$ being added to $-4+.8000000$, the ſum will be $-6+.5000000$; for though the ſum of the characteriſtics -3 and -4 be -7, the affirmative unit drawn from the decimals reduces it to -6.

2dly, *Whenever a ſubtraction is to be made in logarithms, it muſt be performed in the decimal parts as uſual; but if the characteriſtic of the ſubtrahend, or of the number from whence the ſubtraction is to be made, or of both, be negative, they muſt be treated in the ſubtraction as the nature of ſuch quantities requires.* Thus $-3+.8900000$ ſubtracted from $-1+.7600000$ leaves 1.8700000: for if $+1$, on account of the decimals, be added to -3, the characteriſtic of the ſubtrahend, it will be reduced to -2, which being ſubtracted from -1 as above, leaves $+1$. Nay, the learner muſt not be diſcouraged if he ſometimes finds himſelf obliged to ſubtract a greater logarithm from a leſs, as will always be the caſe where the logarithm of a proper fraction is required: as for example, let it be required to find the logarithm of $\frac{1}{2}$: here ſubtracting 0.3010300, the logarithm of 2, from 0.0000000, the logarithm of 1, there will remain $-1+.6989700$, the logarithm of $\frac{1}{2}$; for in this ſubtraction, $+1$, on account of the decimals being added to the characteriſtic of the ſubtrahend, gives 1, which ſubtracted from 0 above, leaves -1.

Note, *The logarithm of a vulgar fraction may alſo be obtained by throwing it into a decimal.* Thus the logarithm of $\frac{2}{3}$ may be obtained, either by ſubtracting the logarithm of 3 from that of 2, or elſe by taking

out the logarithm of this decimal fraction .6666667, which is the ſame as the logarithm of the whole number 6666667, except that the characteriſtic of the former logarithm is —1, and that of the latter +6.

3dly, *In the multiplication of logarithms the ſame care muſt be taken as in addition.* Thus if it be required to multiply this logarithm —3+.7000000 by 9, the product will be —21+.3000000; for though the product of —3×9 be —27, yet the +6 drawn from the decimals reduces it to —21.

4thly, *Whenever a logarithm is to be divided by* 2, 3, 4, &c. *in order to obtain the ſquare, cube, biquadrate,* &c. *root of its natural number, if the characteriſtic be negative, and will not be divided without a fraction, my way is to reſolve it into two parts, to wit, into a negative part which will be divided, and an affirmative part which will incorporate with the decimals annexed.* Thus if I was to take the half of this logarithm —1+.7000000, I cannot join the —1 to the decimals annexed, becauſe they are quantities of different kinds; therefore I reſolve the characteriſtic —1 into two parts, to wit, —2+1, and then taking the half of —2, which is —1, I join the affirmative part +1 to the decimals annexed, and ſo take the half of +17, which is +8 *&c.*; therefore the half of the aforeſaid logarithm is —1+.8500000: had the characteriſtic been —3, I ſhould have reſolved it into —4+1. Had $\frac{1}{3}$ of the foreſaid logarithm been required, I ſhould have reſolved the characteriſtic —1 into —3+2, and ſo ſhould have taken, firſt, the third part of —3, which is —1 and then of +27, which is +9: had the characteriſtic been —2, I ſhould have reſolved it into —3+1; had it been —4, I ſhould have reſolved it into —6+2, and ſo on.

N. B. Of all the tables hitherto in uſe whoſe logarithms do not run to above ſeven decimal places, I take thoſe publiſhed by Doctor *Sherwin* to be the beſt upon many accounts, and particularly in the diſpoſition of the logarithms: theſe therefore I ſhall not ſcruple

ſcruple to recommend to my readers, whom I ſhall alſo refer to the directions there given for finding the logarithms of all abſolute numbers from 1 to 10000000, and *vice verſa*. But I muſt own I cannot with equal juſtice recommend the method there taken to avoid negative indexes by creating new ones, and by uſing arithmetical complements. It is not to be denied but that this ſort of practice may be abſolutely neceſſary to ſuch as know nothing of the nature and uſe of negative quantities; but thoſe who do, I believe, will find the rules here laid down more natural and convenient; and as they carry their own reaſons along with them, I doubt not but that the learner will find them eaſier to be remembered, and leſs liable to be miſunderſtood.

397. In the tables above recommended, after the logarithms on every page, are two columns, one called a column of differences, and ſigned *D*; the other called a column of proportional parts, and ſigned *Pts* above, and *Pro* below: theſe two columns, as well as the reſt, have been explained by the author; but, leſt they ſhould not be thoroughly underſtood by what is there ſaid of them, I ſhall take the liberty, by a ſingle inſtance, to explain more at large the reaſon and uſe of theſe columns: I ſhall take my example from the author himſelf. Let it then be required to find by the tables the logarithm of this number of ſeven places, to wit, 5423758: to do this, I firſt put down 6, the characteriſtic of the logarithm ſought, according to the directions given in art. 394; then I conſider in the next place, that though by the help of the tables we can find the logarithm of any number under 10000000, yet that the abſolute numbers there do not, properly ſpeaking, run to above five places; therefore I lower the abſolute number given, to wit, 5423758, to this, 54237·58, which will not affect the decimal part of the logarithm ſought; then ſetting aſide the characteriſtic, I take out of the tables the logarithm of the five integral places 54237

according

according to the directions there given, and find it to be 7342957; this I ſubtract from the logarithm of 54238, that is, from 7343037, and find the difference to be 80. But the deſign of the column of differences is on purpoſe to avoid this ſubtraction: for, had I taken out of that column the number oppoſite to 54237, the integral part of the abſolute number propoſed, or if no ſuch oppoſite number was to be found, had I taken the neareſt number above, (not below), I ſhould have found the number 80.1, that is, in a whole number, 80, without any ſubtractraction. Thus then the caſe ſtands: as the abſolute number propoſed 54237 .58 lies between the two neareſt tabular numbers 54237 and 54238, whoſe difference is 1, ſo muſt the logarithm ſought lie between the logarithms of the tabular numbers above mentioned, whoſe difference is 80; therefore I ſay by the golden rule, as 1, the difference of the two tabular numbers, between which mine lies, is to 80, the difference of the two tabular logarithms between which the logarithm ſought lies, ſo is .58, the difference betwixt my number and the neareſt leſs tabular number, to 46, the difference betwixt the logarithm ſought and the neareſt leſs tabular logarithm; therefore adding this difference 46 to the neareſt leſs tabular logarithm, to wit, 7342957, I have 7343003, which being joined as decimal parts to the characteriſtic 6, gives 6 .7343003 for the logarithm ſought. This number 46, which was the fourth proportional above found, is called the proportional part, becauſe it is the ſame proportional part of 80, the difference of the two neareſt tabular logarithms, that .58, the decimal part of the number propoſed, is of 1, the difference of the two neareſt tabular numbers. Whoever attends to the foregoing operation will eaſily perceive, that this proportional part 46 was gained from multiplying 80, the common difference, by .58, the decimal part of the abſolute number propoſed; and the ſame would have been obtained if the common difference

80 had firſt been multiplied by .5 and then by .08, and the products been taken into one ſum: now it is to ſave theſe two multiplications that the column of proportional parts was contrived; for whoever looks there for the common difference 80 will find all the products of the ſaid common difference multiplied by .1, .2, .3, .4, .5, &c. to .9 incluſively; and looking for the number over againſt .5, he will find the number 40, which ſhews that the number 40 is $\frac{5}{10}$ of the common difference 80; ſo alſo over againſt 8 he will find the number 64, which ſhews that the number 64 is $\frac{8}{10}$ of the common difference; but we do not want $\frac{8}{10}$ of it, but 8 hundredth parts; therefore he muſt not take the number 64, but a tenth part of that number, to wit, 6 .4 or 6, which being added to 40, the proportional part before found, gives 46, to be added to the neareſt leſs tabular logarithm in order to obtain the logarithm ſought.

But when all poſſible exactneſs is required, and no errors are intended to be committed, but ſuch as unavoidably ariſe from the imperfection of the logarithms themſelves; I would adviſe the reader to compute the proportional parts himſelf, as above, rather than truſt to the table for them, though he will rarely find any conſiderable difference. My reaſon for this advice is, becauſe in the table of proportional parts, no notice is taken of decimals; whereas thoſe decimals ought not in all caſes to be neglected, at leaſt not till the operation is over, and the artiſt ſees what it is he throws away or takes into his account, to leſſen the error as much as he can.

FINIS.